Contract Documents and Specifications

# CITY OF MOLALLA

## Molalla Avenue Improvements
## Urban Renewal Project No. 16-01

**Clackamas County, Oregon**

**January, 2016**

Murray, Smith & Associates, Inc.
777 High Street, Suite 200
Eugene, OR 97401

MSA
Murray, Smith & Associates, Inc.
Engineers/Planners

CONTRACT DOCUMENTS, GENERAL CONDITIONS

AND TECHNICAL SPECIFICATIONS

# City of Molalla

## Molalla Avenue Improvements

## Urban Renewal Project No. 16-01

Clackamas County, Oregon

January 2016

Murray, Smith & Associates, Inc.
777 High Street, Suite 200
Eugene, OR 97401

# City of Molalla
# Molalla Avenue Improvements
# Urban Renewal Project No. 16-01

## TABLE OF CONTENTS

PAGE


Notice to Contractors ..... 1

Instruction to Bidders ..... 3

Bid Proposal ..... 13

Bid Bond ..... 21

First-Tier Subcontractor Disclosure Form ..... 23

Contract for Construction ..... 25

Construction Performance Bond ..... 31

Construction Payment Bond ..... 35

Prevailing Wage Rate Determination ..... 39

Project Specifications ..... 41


## APPENDICES


Appendix A ..... Instructions for Form ANS 4

Appendix B ..... ANS 4 - Asbestos Waste Shipment Report Form

Appendix C ..... ANS 6 - DEQ Notification Form - Nonfriable Asbestos Abatement

Appendix D ..... DEQ – How to Remove Nonfriable Asbestos (AC) Water Pipe

Appendix E ..... Geotechnical Engineering Design Study

*This Page Intentionally Left Blank*

# NOTICE TO CONTRACTORS

## NOTICE TO CONTRACTORS

## NOTICE TO CONTRACTORS

Sealed bids for **Molalla Avenue Improvements - Urban Renewal Project No. 16-01** will be received by the City Recorder of the City of Molalla until 11:00 am on Friday, January 29, 2016 at which time bidding will be closed. In addition, all Bidders and first-tier sub-contractors, must notify the City within 24 hours of downloading the contract documents. Notification must be sent by e-mail and include contractor name, physical address and phone number for the company. Bids will not be accepted by the City unless this written notification has been received. Please email chris.link@msa-ep.com to indicate you are a contract plan holder. Copies of the plan holder list may be obtained by sending an e-mail to the address above.

Pursuant to ORS 279C.370(2), within two (2) working hours of the Bid Closing all Bidders shall submit to the City a disclosure form as furnished with these bid documents identifying any first-tier sub-contractors (those Entities that would be contracting directly with the prime contractor) that will be furnishing labor or materials on the Contract, if awarded, whose subcontract value would be equal to or greater than:

- Five percent of the total Contract Price, but at least $15,000, or
- $350,000 regardless of the percentage of the total Contract Price.

Bids and disclosure forms shall be addressed to Ms. Sadie Cramer, City Recorder, City of Molalla, 117 N. Molalla Avenue, Molalla, OR 97038. At 11:00 am, bids will be opened and read aloud in the City Hall Conference Room, Molalla, OR. Only bids for which a disclosure form has been submitted within two (2) working hours of the Bid Closing date and time will be considered responsive.

The scope of work generally consists of the following:

> Approximately 2,000 lineal feet of roadway reconstruction with treated subgrade, curb & gutter, sidewalks, new ADA ramps and retrofits; removing and/or abandoning the existing waterline and replacing with new PVC C900 waterline; new stormwater drainage system; electrical conduit and junction boxes for an illumination system; signing and striping;, and landscaping including tree grates and trees.

The project's estimated construction cost range is $2.0 to $2.5 million. The City reserves the right to adjust the basic bid quantities if the submitted low responsive bid exceeds the available budget. All adjusted quantities will be paid based on the bid unit prices. The work is anticipated to begin in March, 2016.

The Contract Documents for the above project may be examined at Murray, Smith & Associates, Inc., 121 S.W. Salmon, Suite 900, Portland, Oregon 97204, Phone (503) 225-9010, on working days, between the hours of 8:00 AM and 4:00 PM, and at local plan centers.

Copies of said documents may also be obtained from Murray, Smith & Associates, Inc. 121 S.W. Salmon, Suite 900, Portland, Oregon 97204 upon payment of $35.00 for each set plus $5.00

additional for each set if mailing is requested. Payment shall be by check or money order only. This amount is not refundable and return of the documents is not required.

Plan sets and Specifications are also available in electronic PDF format at the City of Molalla website, www.cityofmolalla.com/rfps. Electronic PDF copies are available without charge for contractors and material suppliers.

Plan sets and Specifications may be examined at the following locations:

| | | |
|---|---|---|
| City of Molalla | 117 N. Molalla Ave. | Molalla, OR |
| Central Oregon Builders Exchange | 1902 NE 4th | Bend, OR |
| Daily Journal of Commerce – OR | Electronic Only - (503) 274-0624 | Portland, OR |
| Eugene Builders Exchange | 2460 West 11th | Eugene, OR |
| McGraw-Hill Construction/Dodge | 3461 NW Yeon Ave. | Portland, OR |
| Oregon Contractor Plan Center | 5468 SE International Way | Milwaukie, OR |
| Salem Contractors Exchange | 2256 Judson St., SE | Salem, OR |
| SW Washington Contractors Assoc. | 7017 NE Hwy 99, #214 | Vancouver, WA |
| Willamette Valley Bid Center | 33862 SE Eastgate Cr. | Corvallis, OR |

Bidders must be pre-qualified to bid on this project. Bidders not currently pre-qualified by the Owner, Engineer, or the Oregon Department of Transportation may apply for pre-qualification with the Owner or Engineer prior to the bid opening on forms available or similar to those available from ODOT (the Oregon Department of Transportation).

No bid shall be received or considered unless the Bidder is registered with the Construction Contractors Board as required by ORS chapter 701.021.

To be considered, bids must be completed on the bidding forms provided, in the manner prescribed in the bidding documents and accompanied by a 5% bid security in favor of the City of Molalla. Each bidder must indicate in the space provided on the Bid Form, whether they are a Resident or a Non-Resident Bidder pursuant to ORS 279A.120.

This public works project is subject to the provisions of ORS 279C.800 to ORS 279C.870. By submission of a bid, each bidder certifies that Oregon Prevailing Wage Rates are included in the bid prices. Contractors need not be licensed for asbestos handling per ORS 468A.720 to complete this project. A pre-bid conference will not be held for this project.

The City of Molalla reserves the right to reject any or all bids not in compliance with all prescribed public bidding procedures and requirements, may reject for good cause any and all bids upon a finding of the agency if it is in the public interest to do so, and may waive all informalities. No bidder may withdraw or modify his/her bid prior to the lapse of thirty (30) days after bid opening.

By Order of the City Council of the City of Molalla.

# INSTRUCTIONS TO BIDDERS

# INSTRUCTIONS TO BIDDERS

## INSTRUCTIONS TO BIDDERS

### ARTICLE 1 — DEFINED TERMS

1.1 Terms used in these Instructions to Bidders which are defined in the Standard General Conditions of the Construction Contract (No. C-700, 2013 Ed.) have the meanings assigned to them in the General Conditions. The term "Bidder" means one who submits a Bid directly to OWNER, as distinct from a sub-bidder, who submits a bid to a Bidder. The term "Successful Bidder" means the lowest, qualified, responsible and responsive Bidder to whom OWNER (on the basis of OWNER'S evaluation as hereinafter provided) makes an award. The term "Bidding Documents" includes the Advertisement or Invitation to Bid, Instructions to Bidders, the Bid Form, and the proposed Contract Documents (including all Addenda issued prior to receipt of Bids).

### ARTICLE 2 — COPIES OF BIDDING DOCUMENTS

2.1 Complete sets of Bidding Documents in the number and for the sum, if any, stated in the Advertisement or Invitation to Bid may be obtained from ENGINEER.

2.2 Complete sets of Bidding Documents must be used in preparing Bids. Neither OWNER nor ENGINEER assume any responsibility for errors or misinterpretations resulting from the use of incomplete sets of Bidding Documents.

2.3 OWNER and ENGINEER in making copies of Bidding Documents available on the above terms do so only for the purpose of obtaining Bids on the Work and do not confer a license or grant for any other use.

### ARTICLE 3 — QUALIFICATIONS OF BIDDERS

3.1 Bidders must be pre-qualified to bid on this project. Bidders not currently pre-qualified for this Contract by the OWNER, ENGINEER, or by ODOT (the Oregon State Department of Transportation) may apply for prequalification by filing a completed pre-qualification statement with the ENGINEER on a form prescribed by the Oregon State Department of Transportation. Bidders filing pre-qualification applications with the ENGINEER should file the statement no later than the scheduled date for receipt of Bids.

## ARTICLE 4 — EXAMINATION OF CONTRACT DOCUMENTS AND SITE

4.1 It is the responsibility of each Bidder before submitting a Bid, to (a) examine the Contract Documents thoroughly, (b) visit the site to become familiar with local conditions that may affect cost, progress, performance, or furnishing of the Work, (c) consider Federal, State and Local Laws and Regulations that may affect cost, progress, performance or furnishing of the Work, (d) study and carefully correlate Bidder's observations with the Contract Documents, and (e) notify ENGINEER of all conflicts, errors, or discrepancies in the Contract Documents.

4.2 Information and data reflected in the Contract Documents with respect to Underground Facilities at or contiguous to the site is based upon information and data furnished to OWNER and ENGINEER by owners of such Underground Facilities or others, and OWNER does not assume responsibility for the accuracy or completeness thereof unless it is expressly provided otherwise in the Supplementary Conditions.

4.3 Provisions concerning responsibilities for the adequacy of data furnished to prospective Bidders on subsurface conditions, underground facilities and other physical conditions, and possible changes in the Contract Documents due to differing conditions appear in Article 5 of the General Conditions.

4.4 Before submitting a Bid each Bidder will be responsible to make or obtain such explorations, tests, and data concerning physical conditions (surface, subsurface, and Underground Facilities) at or contiguous to the site, or otherwise which may affect cost, progress, performance, or furnishing of the Work and which Bidder deems necessary to determine its Bid for performing and furnishing the Work in accordance with the time, price, and other terms and conditions of the Contract Documents.

4.5 On request in advance, OWNER will provide each bidder access to the site to conduct such explorations and tests as Bidder deems necessary for submission of a Bid. Bidder shall fill all holes, cleanup, and restore the site to its former condition upon completion of such explorations.

4.6 The lands upon which the Work is to be performed, rights-of-way and easements for access thereto and other land designated for use by the Contractor in pe1formingthe Work are identified in the Contract Documents. All additional lands and access thereto required for temporary construction facilities or storage of materials and equipment are to be provided by Contractor. Easements for permanent structures or permanent changes in existing structures are to be obtained and paid for by OWNER unless otherwise provided in the Contract Documents.

4.7 The submission of a bid will constitute an incontrovertible representation by Bidder that Bidder has complied with every requirement of this ARTICLE 4, that without exception the Bid is premised upon performing and furnishing the Work required by the Contract Documents and such means, methods, techniques, sequences, or procedures of construction as may be indicated in or required by the Contract Documents, and that the Contract Documents are sufficient in scope and detail to indicate and convey understanding of all te1ms and conditions forpe1formance and furnishing of the Work to complete the project.

**ARTICLE 5 — INTERPRETATIONS AND ADDENDA**

5.1 All questions about the meaning or intent of the Contract Documents are to be directed to the ENGINEER. Interpretations or clarifications considered necessary by the ENGINEER in response to such questions will be issued by Addenda mailed or delivered to all parties recorded by ENGINEER as having received the Bidding Documents. Questions received less than three days prior to the date for the opening of Bids may not be answered. Only questions answered by formal written Addenda will be binding. Oral and other interpretations or clarifications will be without legal effect.

5.2 Addenda may also be issued to modify the Bidding Documents as deemed advisable by OWNER or ENGINEER.

**ARTICLE 6 — BID SECURITY**

6.1 Bid Security in the amount of five percent (5%) of the Base Bid must accompany each Bid proposal. Bid Security may be in the form of a surety bond or cashier's check, but if it is a surety bond, it must comply with the requirements of Article 5 of the General Conditions. If a surety bond is submitted as Bid Security, it shall be written on EJCDC NO. C-430, Bid Bond, or similar instrument, and the attorney-in-fact who executes the bond shall affix to the bond a current copy of his power of attorney. Surety companies executing bonds must appear on the U.S. Treasury Department's most current list (Circular 570 as amended) and be authorized to transact business in the state where the project is located.

6.2 The Bid security of the top three Bidder will be retained until the successful Bidder has executed the Agreement and furnished the required contract security, whereupon the Bid Securities will be returned. If the Successful Bidder fails to execute and deliver the Agreement and furnish the required contract security within ten (10) days after the Notice of Award, OWNER may annul the Notice of Award and the Bid Security of that Bidder will be forfeited. The Bid Security of other Bidders whom the OWNER believes to have a reasonable chance of receiving the award' may be retained by the OWNER until the earlier

of the seventh day (7th) day after the Effective Date of the Agreement or the thirty first (31st) day after the Bid opening, whereupon Bid Security furnished by such Bidders will be returned. Bid Security and Bids which are not competitive will be returned within seven (7) days after the Bid opening.

**ARTICLE 7 — CONTRACT TIME**

7.1 The number of days within which, or the dates by which, the Work is to be substantially completed and also completed and ready for final payment (the Contract Time) are set forth in the Agreement.

**ARTICLE 8 — LIQUIDATED DAMAGES**

8.1 Provisions for liquidated damages are set forth in the Agreement. Delay damages will be assessed for failure to achieve substantial completion AND/OR final completion as defined in the General Conditions. Liquidated damages shall be paid by the Contractor to the Owner or the OWNER may withhold damages from any amounts due to the Contractor.

**ARTICLE 9 — SUBSTITUTING "OR-EQUAL" ITEMS**

9.1 The materials and equipment described in the Bidding Documents establish a standard of required function, dimension, appearance, and quality to be met by any proposed substitution. All materials and equipment shall be as specified "or equal", without regard to the presence or lack of "or equal" verbiage in the specific specification unless noted otherwise. No substitution will be considered unless written request for approval has been submitted by the Bidder and has been received by the ENGINEER at least seven (7) days prior to the date for receipt of Bids. Each such request shall include the name of the material or equipment for which it is to be substituted and a complete description of the proposed substitute, including drawings, cuts, performance and test data and any other information necessary for an evaluation. A statement setting forth any changes in other materials, equipment, or Work that incorporation of the substitution would require shall be included. The burden of proof of the merit of the proposed substitution is upon the Bidder. The ENGINEER'S decision of approval or disapproval of a proposed substitution shall be final. If ENGINEER approves any proposed substitution, such approval will be set forth in an Addendum issued to all prospective Bidders. Bidders shall not rely upon approvals made in any other manner.

**ARTICLE 10 — SUBCONTRACTORS, SUPPLIERS AND OTHERS**

10.1 The OWNER may require the identity of certain Subcontractors, Suppliers, and other persons and organizations (including those who are to furnish the principal items of material and equipment) to be submitted to OWNER in

advance of the Notice of Award. The apparent Successful Bidder, and any other Bidder if requested shall within seven (7) days after the Bid opening submit to the OWNER a list of all such Subcontractors, Suppliers, and other persons and organizations proposed for those portions of the Work for which such identification is required. Such list shall be accompanied by an experience statement with pertinent information regarding similar projects and other evidence of qualification of each such Subcontractor, Supplier, person or organization if requested by the OWNER.

10.2 If OWNER or ENGINEER after due investigation has reasonable objection to any proposed Subcontractor, Supplier, other person or organization, either may before the Notice of Award is given request the apparent Successful Bidder to submit an acceptable substitute in which case the apparent Successful Bidder shall submit an acceptable substitute, that Bidder's bid price will be increased (or decreased) by the difference in cost occasioned by such substitution and OWNER may consider such price adjustment in evaluating Bids and making the contract award. If apparent Successful Bidder declines to make any such substitution, OWNER may award the contract to the next lowest Bidder that proposes to use acceptable Subcontractors, Suppliers, and other persons and organizations. The declining to make requested substitutions will not constitute grounds for sacrificing the Bid Security of any Bidder.

10.3 Any Subcontractor, Supplier, other person or organization listed and to whom OWNER or ENGINEER does not make written objection prior to the giving of the Notice of Award will be deemed acceptable to OWNER and ENGINEER, subject to revocation of such acceptance after the Effective Date of the Agreement as provided in Paragraph 7.06 of the General Conditions.

10.4 CONTRACTOR shall not be required to employ any Subcontractor, Supplier, individual, or entity against whom CONTRACTOR has reasonable objection.

**ARTICLE 11 — BID FORM**

11.1 The Bid Form is included within the Contract Documents.

11.2 Bid Forms must be completed in ink or by typewriter. The Bid price of each item on the form must be stated in numerals.

11.3 Bids by corporations must be executed in the corporate name by the president or a vice-president (or other corporate officer accompanied by evidence of authority to sign) and the corporate seal must be affixed and attested by the secretary or an assistant secretary. The corporate address and state of incorporation must be shown below the signature.

11.4 Bids by partnerships must be executed in the partnership name and signed by a partner, whose title must appear under the signature and the official address of the partnership must be shown below the signature.

11.5 A Bid by a limited liability company shall be executed in the name of the firm by a member and accompanied by evidence of authority to sign. The state of formation of the firm and the official address of the firm must be shown below the signature.

11.6 A Bid by an individual shall show the Bidder's name and official address.

11.7 A Bid by a joint venture shall be executed by each joint venturer in the manner indicated on the Bid form. The official address of the joint venture must be shown below the signature.

11.8 All names must be typed or printed below the signature.

11.9 The bid shall contain an acknowledgment of receipt of all Addenda (the numbers of which must be filled in on the Bid Form).

11.10 The CCB Registration, business address and telephone number for communications regarding the Bid must be shown.

**ARTICLE 12 — SUBMISSION OF BIDS**

12.1 To be responsive, bids shall be submitted at the time and place identified in the Advertisement or Invitation to Bid, be executed as detailed in these Instructions to Bidders and shall be enclosed in an opaque sealed envelope, marked with the Project Title (and, if applicable, the designated portion of the Project for which the Bid is submitted) and name and address of the Bidder and accompanied by the Bid Security and other required documents. If the Bid is sent through the mail or other delivery system, the sealed envelope shall be enclosed in a separate envelope with the notation "BID ENCLOSED" on the face of it.

12.2 To be responsive CONTRACTOR must complete, sign and submit the following documents:

a. Bid Proposal

b. Bid Bond

c. First Tier Disclosure

**ARTICLE 13 — MODIFICATION AND WITHDRAWAL OF BIDS**

13.1 Bids may be modified or withdrawn by an appropriate document duly executed (in the manner that a Bid must be executed) and delivered to the place where the Bids are to be submitted at any time prior to the opening of Bids.

13.2 If, within twenty-four hours after Bids are opened, any Bidder files a duly signed, written notice with OWNER and promptly thereafter demonstrates to the reasonable satisfaction of OWNER that there was a material and substantial mistake in the preparation of its Bid, that Bidder may withdraw its Bid and the Bid Security will be returned. Thereafter, that Bidder will be disqualified from further bidding on the Work to be provided under the Contract Documents.

**ARTICLE 14 — OPENING OF BIDS**

14.1 Bids will be opened and read aloud publicly. An abstract of the amounts of the base Bids and major alternates (if any) may be made available to Bidders after the opening of the Bids.

**ARTICLE 15 — BIDS TO REMAIN SUBJECT TO ACCEPTANCE**

15.1 All bids will remain subject to acceptance for thirty (30) days after the day of the Bid opening, but OWNER may, in its sole discretion, release any Bid and return the Bid Security prior to that date.

**ARTICLE 16 — AWARD OF CONTRACT**

16.1 OWNER reserves the right to reject any and all Bids, to waive any and all informalities not involving price, time, or changes in the Work and to negotiate contract te1ms with the Successful Bidder, and the right to disregard all nonconforming, non-responsive, unbalanced, or conditional Bids. Also, OWNER reserves the right to reject the Bid of any Bidder if OWNER determines the Bid to be non-responsive per ORS 279B.l10. In the event of discrepancy between the written and numerical amounts the written prices will govern. Discrepancies in the multiplication of units of Work and unit price will be resolved in favor of the unit prices. Discrepancies between the indicated sum of any column of figures and the correct sum thereof will be resolved in favor of the correct sum.

16.2 In evaluating Bids, OWNER will consider the qualifications of the Bidders, whether or not the Bids comply with the prescribed requirements, and such alternates, unit prices, and other data, as may be requested in the Bid Form or prior to the Notice of Award.

16.3 OWNER may consider the qualifications and experience of Subcontractors, Suppliers, and other persons and organizations proposed for those portions of the Work as to which the identity of Subcontractors, Suppliers, and other persons and organizations must be submitted as provided in the Supplementary Conditions.

OWNER also may consider the operating costs, maintenance requirements, performance data, and guarantees of major items of materials and equipment

proposed for incorporation in the Work when such data is required to be submitted prior to the Notice of Award.

16.4 OWNER may conduct such investigations as OWNER deems necessary to assist in the evaluation of any Bid and to establish the responsibility, qualifications and financial ability of Bidders, proposed Subcontractors, Suppliers, and other persons and organizations to perform and furnish the Work in accordance with the Contract Documents to OWNER'S satisfaction within the prescribed time.

16.5 If the contract is to be awarded, the award will be based upon the lowest responsive/responsible bid for the total of the Basic Bid and such alternatives that in the sole judgment of the OWNER will best serve its interests.

16.6 If the contract is to be awarded, OWNER will give the Successful Bidder a Notice of Award within thirty (30) days after the Bid opening.

16.7 More than one Bid for the same Work from an individual or entity under the same or different names will not be considered. Reasonable grounds for believing that any Bidder has an interest in more than one Bid for the Work may be cause for disqualification of that Bidder and the rejection of all Bids in which that Bidder has an interest.

**ARTICLE 17 — CONTRACT SECURITY**

17.1 Prior to execution of the Contract, the Bidder shall furnish separate bonds covering the faithful performance of the Contract and the payment of all obligations arising thereunder, each in an amount equal to 100 percent of the Contract Sum. The cost of the furnishing of such bonds shall be included in the Bid. The Surety issuing such bonds shall be licensed to issue bonds in the State of Oregon. Such bonds shall comply with the provisions of Article 6 of the General Conditions.

**ARTICLE 18 — SIGNING OF AGREEMENT**

18.1 When OWNER gives a Notice of Award to the Successful Bidder, it will be accompanied by three unsigned counterparts of the Agreement with all other written Contract Documents attached. Within ten (10) days thereafter, Contractor shall sign and deliver the counterparts of the Agreement and attached documents to OWNER with the required Bonds. Within twenty-five (25) days thereafter, OWNER shall deliver one fully signed counterpart to Contractor. Each counterpart shall include a complete set of Drawings attached by reference.

## ARTICLE 19 — CONFERENCES

19.1 PRE-BID CONFERENCE

If a pre-bid conference is specified in the Notice to Contractors, it shall be non-mandatory. If so scheduled, representatives of OWNER and ENGINEER will be present to discuss the Project. Bidders are encouraged to attend and participate in the conference. ENGINEER will transmit to all prospective Bidders of record such Addenda as ENGINEER considers necessary in response to questions arising at the conference. Oral statements may not be relied upon and will not be binding or legally effective. The time and date of the pre-bid meeting will be provided by the Engineer.

19.2 PRECONSTRUCTION CONFERENCE

Either before or soon after the actual award of the Contract (but in any event prior to the start of Work at the site), the Contractor or his representative, and his subcontractors, shall attend a Preconstruction Conference with representatives of the OWNER, the funding agencies and the ENGINEER. The Conference will be held for review and acceptance of schedules referred to in paragraph 2.04 of the General Conditions, to establish procedures for handling shop drawings and other submittal and for processing applications for payment, and to acquaint the participants with the general plan of contract administration and requirements under which the construction operation is to proceed. The date, time, and place of the Conference will be furnished to the Contractor by the OWNER. The Contractor will notify his subcontractors of the Conference and require their attendance.

## ARTICLE 20 — IDENTIFICATION

20.1 The word "OWNER" as used herein refers to the CITY OF MOLALLA, as identified in the proposal, with whom the CONTRACTOR will enter into an agreement for the work. The OWNER shall be responsible for actions requested by the ENGINEER including payment in accordance with the terms of the Contract.

20.2 The word "ENGINEER" as used throughout these documents refers to the firm of Murray, Smith & Associates, Inc. All correspondence, notifications and requests of the OWNER by the CONTRACTOR shall be through the ENGINEER.

20.3 The word "CONTRACTOR" refers to the corporation, partnership or sole proprietorship which enters into a contractual obligation with the OWNER to complete the work. Subcontractors shall not be recognized.

**ARTICLE 21 — FIRST -TIER SUBCONTRACTOR DISCLOSURE**

21.1 Within two working hours after the date and time of the deadline when bids are due to a contracting agency for a public improvement contract, a bidder shall submit to the contracting agency a disclosure of the first-tier sub-contractors that:

(A) Will be furnishing labor or will be furnishing labor and materials in connection with the public improvement contract; and

(B) Will have a contract value that is equal to or greater than five percent of the total project bid, or $15,000, whichever is greater, or $350,000 regardless of the percentage of the total project bid.

21.2 The disclosure of first-tier subcontractors under this subsection must include the name of each subcontractor, the category of work that each subcontractor will perform and the dollar value of each subcontract. The information shall be disclosed in the form provided in this bid document.

21.3 If the Bidder will not be using any Subcontractors that are subject to the above disclosure requirements, you are required to indicate "NONE" on the accompanying form.

21.4 The owner must reject a bid if the bidder fails to submit the disclosure form with this information by the stated deadline, even if no subcontractors are large enough to be disclosed, per OAR 125-249-0360.

# BID PROPOSAL

**BID PROPOSAL**

## BID PROPOSAL

**TO:** Ms. Sadie Cramer
City Recorder
City of Molalla
117 North Molalla Avenue
Molalla, OR 97038

Date: Jan 29, ~~2015~~ 2016

The undersigned is a (indicate one): ☑ RESIDENT ☐ NON-RESIDENT

bidder as defined by ORS 279A.120, structured as (check one of the following and insert information requested):

☑ a. **A Corporation** organized and existing under laws of the State of Oregon; or

☐ b. **A Partnership** registered under the laws of the State of_____; or

☐ c. **An individual** doing business under an assumed name registered under the laws of the State of _____.

The undersigned bidder declares that the only persons or parties interested in this proposal are those named herein, that this proposal is in all respects fair and without fraud and that it is made without collusion with any representatives of the OWNER.

The bidder further declares that: a.) he has examined the plans, specifications, and other proposed contract documents; b.) he has determined the extent, character, and location of the proposed Work, the nature and type of excavation to be done, the location and condition of existing streets and road-ways giving access to the site of the Work, and topography of the site of the Work; and c.) he has personally inspected the site of the Work and has satisfied himself as to the conditions of the Work and understands the listing of materials as included herein is brief and is intended only to associate the said quantities with detailed requirements of the contract documents.

The bidder does hereby propose to furnish all materials, tools, equipment, and appliances, and to perform all labor and work necessary to construct and complete the project entitled:

**City of Molalla**

**Molalla Avenue Improvements**

**Urban Renewal Project No. 16-01**

and all specified work appurtenant thereto, and in connection with this project for the OWNER with the time limit specified, and in accordance with plans, specifications and change order documents prepared by the ENGINEER for the sums set forth in the following schedule of prices, it being understood that the unit prices are independent of the exact quantities involved and that they represent a true measure of the labor and materials required to perform the Work.

The successful bidder agrees that if this proposal is accepted, bidder will execute the required documents and supply the required submittal information as specified herein, within the time frames established herein.

The successful bidder agrees to be substantially complete with all work by November 30, 2016, with the potential of contract time extension due to inclement weather conditions, and achieve final completion within 30 calendar days after issuance of the Certificate of Substantial Completion including punch list items.

In the event the successful bidder fails to achieve Substantial Completion or Final Completion of the project within the time limits specified or extended time limits as agreed upon, liquidated damages shall be paid to the OWNER or deducted from amounts due the Contractor, at the rate of One Thousand Dollars ($1,000.00) per calendar day until Substantial Completion is achieved, and/or until Final Completion is achieved. Sundays and legal holidays shall be excluded in determining the number of days in default.

The City has an estimated budget of $2.0 - $2.5 million for this work. The City reserves the right to adjust the basic bid quantities if the submitted low responsive bid exceeds the available budget. All adjusted quantities will be paid based on the bid unit prices. The work is anticipated to begin in March 2016.

## MOLALLA AVENUE IMPROVEMENTS PROJECT – ADDENDUM NO. 2

## BID PROPOSAL

The undersigned hereby certifies that they have examined the location of the project and have read and thoroughly understand the plans and specifications governing the work.

The undersigned hereby agrees to construct the project in accordance with the following bid proposal.

| ITEM NO. | SPEC. NO. | DESCRIPTION | QUANTITY | UNIT | UNIT PRICE | TOTAL |
|---|---|---|---|---|---|---|
| 1 | 0210 | Mobilization | 1 | LS | 122,000.00 | 122,000.00 |
| 2 | 0225 | Temporary Protection & Direction of Traffic, Complete | 1 | LS | 27000.00 | 27000.00 |
| 3 | 0280 | Erosion Control | 1 | LS | 5250.00 | 5250.00 |
| 4 | 0280 | Inlet Protection | 42 | EACH | 70.00 | 2940.00 |
| 5 | 0290 | Pollution Control Plan | 1 | 1 LS | 2725.00 | 2725.00 |
| 6 | 0295 | Removal of Asbestos Material, Non-Friable | 25 | FOOT | 87.00 | 2175.00 |
| 7 | 0305 | Construction Survey Work | 1 | LS | 31500.00 | 31500.00 |
| 8 | 0310 | Removal of Structures and Obstructions | 1 | LS | 18500.00 | 18500.00 |
| 9 | 0320 | Clearing and Grubbing | 1 | ACRE | 5500.00 | 5500.00 |
| 10 | 0330 | General Excavation | 5,730 | CUYD | 12.05 | 69046.50 |
| 11 | 0344 | Treated Subgrade, 10 Inch Thick | 2,690 | SQYD | 6.15 | 16543.50 |
| 12 | 0344 | Treated Subgrade, 12 Inch Thick | 6,060 | SQYD | 5.35 | 32421.00 |
| 13 | 0344 | Portland Cement | 250 | TON | 135.00 | 33750.00 |
| 14 | 0445 | Reconnect Existing Sewer Service Connection | 6 | EACH | 1145.00 | 6870.00 |
| 15 | 0445 | Reconnect/Re-route Existing Storm Sewer Service Connection | 55 | EACH | 585.00 | 32175.00 |
| 16 | 0445 | 6 Inch PVC C900 Storm Sewer Pipe, 5 Ft Depth | 20 | FOOT | 46.00 | 920.00 |
| 17 | 0445 | 10 Inch PVC C900 Storm Sewer Pipe, 5 Ft Depth | 490 | FOOT | 46.50 | 22785.00 |
| 18 | 0445 | 12 Inch PVC C900 Storm Sewer Pipe, 5 Ft Depth | 10 | FOOT | 76.00 | 760.00 |
| 19 | 0445 | 30 Inch PVC C900 Storm Sewer Pipe, 5 Ft Depth | 2,089 | FOOT | 112.00 | 233968.00 |

| ITEM NO. | SPEC. NO. | DESCRIPTION | QUANTITY | UNIT | UNIT PRICE | TOTAL |
|---|---|---|---|---|---|---|
| 20 | 0415 | Video Inspection | 2,089 | FOOT | 3.00 | 6267.00 |
| 21 | 0470 | Concrete Storm Sewer Manholes | 18 | EACH | 4300.00 | 77400.00 |
| 22 | 0470 | Concrete Inlets, Type CG-2 | 24 | EACH | 1725.00 | 41400.00 |
| 23 | 0470 | Concrete Manholes, with Inlet | 2 | EACH | 4650.00 | 9300.00 |
| 24 | 0490 | Sanitary Sewer Spot Repair 6 To 15 Inch, 0 to 15 Ft Deep, 5 Ft Long | 3 | EACH | 875.00 | 2625.00 |
| 25 | 0490 | Sanitary Sewer Spot Repair 6 To 15 Inch, 0 to 15 Ft Deep, Each Additional Ft | 1 | EACH | 2025.00 | 2025.00 |
| 26 | 0490 | Connection to Existing Structures | 1 | EACH | 1635.00 | 1635.00 |
| 27 | 0490 | Minor Adjustment of Manholes | 7 | EACH | 1035.00 | 7245.00 |
| 28 | 0495 | Trench Resurfacing | 241 | SQYD | 42.50 | 10242.50 |
| 29 | 0641 | Aggregate Base | 3,940 | TON | 14.75 | 58115.00 |
| 30 | 0744 | Level 3, ½ Inch Dense MHMAC Mixture | 2,450 | TON | 69.00 | 169050.00 |
| 31 | 0759 | Concrete Curbs, Curb and Gutter | 3,890 | FOOT | 18.35 | 71381.50 |
| 32 | 0759 | Concrete Curbs, Standard Curb | 100 | FOOT | 26.00 | 2600.00 |
| 33 | 0759 | Concrete Driveways | 3,210 | SQFT | 7.00 | 22470.00 |
| 34 | 0759 | Concrete Driveways, Reinforced | 1,470 | SQFT | 11.00 | 16170.00 |
| 35 | 0759 | Concrete Walks | 31,140 | SQFT | 5.35 | 166599.00 |
| 36 | 0759 | Extra for New Sidewalk Ramps | 36 | EACH | 590.00 | 21240.00 |
| 37 | 0860 | Longitudinal Pavement Markings - Paint | 2,460 | FOOT | 0.65 | 1599.00 |
| 38 | 0867 | Pavement Bar, Type B | 2,530 | SQFT | 7.25 | 18342.50 |
| 39 | 0905 | Remove Existing Signs | 1 | LS | 450.00 | 450.00 |
| 40 | 0905 | Remove and Reinstall Existing Signs | 1 | LS | 2150.00 | 2150.00 |
| 41 | 0910 | Wood Sign Posts | 34 | FBM | 7.00 | 238.00 |
| 42 | 0920 | Sign Support Footings | 1 | LS | 3350.00 | 3350.00 |
| 43 | 0930 | Perforated Steel Square Tube Slip Base Sign Supports | 1 | LS | 340.00 | 340.00 |
| 44 | 0930 | Perforated Steel Square Tube Anchor Sign Supports | 1 | LS | 1415.00 | 1415.00 |
| 45 | 0940 | Type "R" Signs in Place | 33 | SQFT | 12.00 | 396.00 |

| ITEM NO. | SPEC. NO. | DESCRIPTION | QUANTITY | UNIT | UNIT PRICE | TOTAL |
|---|---|---|---|---|---|---|
| 46 | 0964 | Illumination System | 1 | LS | 127250.00 | 127250.00 |
| 47 | 0967 | Landscape Lighting | 1 | LS | 112250.00 | 112250.00 |
| 48 | 1040 | Landscaping | 1 | LS | 106500.00 | 106500.00 |
| 49 | 1070 | Single Mailbox Supports | 3 | EACH | 170.00 | 510.00 |
| 50 | 1070 | Multiple Mailbox Supports | 2 | EACH | 250.00 | 500.00 |
| 51 | 1070 | Mailbox Concrete Collars | 5 | EACH | 54.00 | 270.00 |
| 52 | 1120 | Repair Existing Irrigation System | 1 | LS | 750.00 | 750.00 |
| 53 | 1140 | 6-Inch C900 Water Pipe with Restrained Joints and Class B Backfill | 35 | FOOT | 37.00 | 1295.00 |
| 54 | 1140 | 8-Inch C900 Water Pipe with Restrained Joints and Class B Backfill | 38 | FOOT | 40.00 | 1520.00 |
| 55 | 1140 | 10-Inch C900 Water Pipe with Restrained Joints and Class B Backfill | 1,024 | FOOT | 49.00 | 50176.00 |
| 56 | 1140 | 10-Inch C900 Water Pipe with Non-Restrained Joints and Class B Backfill | 1,601 | FOOT | 41.00 | 65641.00 |
| 57 | 1140 | Ductile Iron Pipe Fittings | 15,575 | POUND | 3.00 | 46725.00 |
| 58 | 1140 | 6-Inch Connection to 6-Inch Existing Main | 3 | EACH | 1690.00 | 5070.00 |
| 59 | 1140 | 8-Inch Connection to 8-Inch Existing Main | 2 | EACH | 1660.00 | 3320.00 |
| 60 | 1140 | 10-Inch Connection to 10-Inch Existing Main | 1 | EACH | 1690.00 | 1690.00 |
| 61 | 1140 | 10-Inch Connection to 12-Inch Existing Main | 2 | EACH | 1690.00 | 3380.00 |
| 62 | 1140 | 10-Inch Connection to 8-Inch Existing Main | 2 | EACH | 1690.00 | 3380.00 |
| 63 | 1150 | 6-Inch Gate Valve | 10 | EACH | 925.00 | 9250.00 |
| 64 | 1150 | 8-Inch Gate Valve | 2 | EACH | 1660.00 | 3320.00 |
| 65 | 1150 | 10-Inch Gate Valve | 8 | EACH | 2190.00 | 17520.00 |
| 66 | 1150 | 10x10-Inch Tapping Sleeve and 10-Inch Valve Assembly | 1 | EACH | 6100.00 | 6100.00 |
| 67 | 1150 | 12x10-Inch Tapping Sleeve and 10-Inch Valve Assembly | 2 | EACH | 6100.00 | 12200.00 |
| 68 | 1160 | Hydrant Assemblies | 7 | EACH | 3980.00 | 27860.00 |
| 69 | 1160 | Reconnecting Existing Hydrants | 1 | EACH | 1690.00 | 1690.00 |

| ITEM NO. | SPEC. NO. | DESCRIPTION | QUANTITY | UNIT | UNIT PRICE | TOTAL |
|---|---|---|---|---|---|---|
| 70 | 1170 | 1-Inch Water Service Connection Piping | 1,225 | FOOT | 25.50 | 31,237.50 |
| 71 | 1170 | 1-Inch Water Meter Assembly | 61 | EACH | 530.00 | 32,330.00 |
| 72 | 1140 | 6-Inch Ductile Iron Water Pipe with Restrained Joints and Class B Backfill | 112 | FOOT | 51.00 | 5712.00 |
| 73 | 0445 | 8 Inch PVC C900 Storm Sewer Pipe, 5 Ft Depth | 30 | FOOT | 41.00 | 1230.00 |

**Total** 2,059,551.00

Accompanying here with is Bid Security which is equal to five percent (5%) of the total amount of the Basic Bid.

The undersigned agrees, if awarded the Contract, to execute and deliver to the OWNER within fifteen (15) days after receiving the Contract forms, an Agreement and satisfactory Construction Performance and Construction Payment Bonds each in an amount equal to one hundred percent (100%) of the Contract sum, using forms provided therefor by the OWNER. The Surety requested to issue the Construction Performance Bond will be:

Travelers Casualty + Surety Company

(Name of Surety Company)

The undersigned hereby authorizes said Surety to disclose any information to the OWNER concerning the undersigned's ability to supply a Construction Performance Bond in the amount of the Contract.

The undersigned certifies that (1) this Bid has been arrived at independently and is being submitted without collusion with, and without any agreement, understanding, or planned common course of action with, any other vendor of materials, supplies, equipment, or services described in the Advertisement for Bids designed to limit independent bidding or competition, (2) the contents of this Bid have not been communicated by the undersigned or its employees or agents to any person not an employee or agent of the undersigned or its surety on any bond furnished with the Bid and will not be communicated to such person prior to the official opening of the bids, and (3) if awarded the Contract, he will commence work within ten (10) calendar days after the date of Notice to Proceed and that he will complete the Work within the specified number of days set forth in the Agreement.

**The undersigned certifies that he has received and duly considered the following Addenda to the specifications.**

Addenda: Number 1 to Number 3 inclusive.

The undersigned agrees if awarded the Contract, that he will comply with the provisions of the Contract Documents and will comply with the provisions of ORS 279C.800 and Oregon Prevailing Wage Rates.

| | |
|---|---|
| **Name of the firm:** | M.L. Houck Construction Co. |
| **Signature:** | |
| **Name:** | Michael Houck |
| **Address:** | 4444 22nd Ave NE |
| | Salem OR 97301 |
| **Phone Number(s):** | 503-463-7177 |
| **Fax:** | 503-463-4979 |
| **Construction Contractors Board No.** | 85697 |
| **If Corporation, Secretary Attests:** | Sarah Kennedy Asst Secretary |
| **If bid is by a partnership, then one of the partners must sign the bid:** | |

# BID BOND

**BID BOND**

EJCDC
ENGINEERS JOINT CONTRACT DOCUMENTS COMMITTEE

PENAL SUM FORM

# BID BOND

Any singular reference to Bidder, Surety, Owner or other party shall be considered plural where applicable.

**BIDDER** *(Name and Address)*:
M.L. HOUCK CONSTRUCTION CO.
4444 22nd Ave. N.E.
Salem, OR 97301

**SURETY** *(Name, and Address of Principal Place of Business)*:
TRAVELERS CASUALTY AND SURETY COMPANY OF AMERICA
One Tower Square
Hartford, CT 06183

**OWNER** *(Name and Address)*:
CITY OF MOLALLA
117 N. Molalla Ave.
Molalla, OR 97038

**BID**

**Bid Due Date:** January 27, 2016

**Description** *(Project Name— Include Location)*: Molalla Avenue Improvements - Urban Renewal Project No. 16-01

**BOND**

**Bond Number:** Bid Bond

**Date:** January 22, 2016

**Penal sum** Five Percent of Contractor's Bid ---- (Words) $ 5% (Figures)

Surety and Bidder, intending to be legally bound hereby, subject to the terms set forth below, do each cause this Bid Bond to be duly executed by an authorized officer, agent, or representative.

| **BIDDER** | | **SURETY** TRAVELERS CASUALTY AND SURETY COMPANY OF AMERICA | |
|---|---|---|---|
| M.L. HOUCK CONSTRUCTION CO. | (Seal) | | (Seal) |
| Bidder's Name and Corporate Seal | | Surety's Name and Corporate Seal | |
| By: Michael Houck | | By: Pamela A. Nelson | |
| Signature | | Signature (Attach Power of Attorney) | |
| Michael Houck | | Pamela A. Nelson | |
| Print Name | | Print Name | |
| President | | Attorney-in-Fact | |
| Title | | Title | |
| Attest: Sarah Kennedy | | Attest: Barbara Jankesley | |
| Signature | | Signature | |
| Title Asst. Secretary | | Title Witness | |

*Note: Addresses are to be used for giving any required notice.*
*Provide execution by any additional parties, such as joint venturers, if necessary.*

1. Bidder and Surety, jointly and severally, bind themselves, their heirs, executors, administrators, successors, and assigns to pay to Owner upon default of Bidder the penal sum set forth on the face of this Bond. Payment of the penal sum is the extent of Bidder's and Surety's liability. Recovery of such penal sum under the terms of this Bond shall be Owner's sole and exclusive remedy upon default of Bidder.

2. Default of Bidder shall occur upon the failure of Bidder to deliver within the time required by the Bidding Documents (or any extension thereof agreed to in writing by Owner) the executed Agreement required by the Bidding Documents and any performance and payment bonds required by the Bidding Documents.

3. This obligation shall be null and void if:

3.1 Owner accepts Bidder's Bid and Bidder delivers within the time required by the Bidding Documents (or any extension thereof agreed to in writing by Owner) the executed Agreement required by the Bidding Documents and any performance and payment bonds required by the Bidding Documents, or

3.2 All Bids are rejected by Owner, or

3.3 Owner fails to issue a Notice of Award to Bidder within the time specified in the Bidding Documents (or any extension thereof agreed to in writing by Bidder and, if applicable, consented to by Surety when required by Paragraph 5 hereof).

4. Payment under this Bond will be due and payable upon default of Bidder and within 30 calendar days after receipt by Bidder and Surety of written notice of default from Owner, which notice will be given with reasonable promptness, identifying this Bond and the Project and including a statement of the amount due.

5. Surety waives notice of any and all defenses based on or arising out of any time extension to issue Notice of Award agreed to in writing by Owner and Bidder, provided that the total time for issuing Notice of Award including extensions shall not in the aggregate exceed 120 days from the Bid due date without Surety's written consent.

6. No suit or action shall be commenced under this Bond prior to 30 calendar days after the notice of default required in Paragraph 4 above is received by Bidder and Surety and in no case later than one year after the Bid due date.

7. Any suit or action under this Bond shall be commenced only in a court of competent jurisdiction located in the state in which the Project is located.

8. Notices required hereunder shall be in writing and sent to Bidder and Surety at their respective addresses shown on the face of this Bond. Such notices may be sent by personal delivery, commercial courier, or by United States Registered or Certified Mail, return receipt requested, postage pre-paid, and shall be deemed to be effective upon receipt by the party concerned.

9. Surety shall cause to be attached to this Bond a current and effective Power of Attorney evidencing the authority of the officer, agent, or representative who executed this Bond on behalf of Surety to execute, seal, and deliver such Bond and bind the Surety thereby.

10. This Bond is intended to conform to all applicable statutory requirements. Any applicable requirement of any applicable statute that has been omitted from this Bond shall be deemed to be included herein as if set forth at length. If any provision of this Bond conflicts with any applicable statute, then the provision of said statute shall govern and the remainder of this Bond that is not in conflict therewith shall continue in full force and effect.

11. The term "Bid" as used herein includes a Bid, offer, or proposal as applicable.

WARNING: THIS POWER OF ATTORNEY IS INVALID WITHOUT THE RED BORDER

TRAVELERS

# POWER OF ATTORNEY

**Farmington Casualty Company**
**Fidelity and Guaranty Insurance Company**
**Fidelity and Guaranty Insurance Underwriters, Inc.**
**St. Paul Fire and Marine Insurance Company**
**St. Paul Guardian Insurance Company**
**St. Paul Mercury Insurance Company**
**Travelers Casualty and Surety Company**
**Travelers Casualty and Surety Company of America**
**United States Fidelity and Guaranty Company**

**Attorney-In Fact No.** 229464

**Certificate No.** 006584675

**KNOW ALL MEN BY THESE PRESENTS**: That Farmington Casualty Company, St. Paul Fire and Marine Insurance Company, St. Paul Guardian Insurance Company, St. Paul Mercury Insurance Company, Travelers Casualty and Surety Company, Travelers Casualty and Surety Company of America, and United States Fidelity and Guaranty Company are corporations duly organized under the laws of the State of Connecticut, that Fidelity and Guaranty Insurance Company is a corporation duly organized under the laws of the State of Iowa, and that Fidelity and Guaranty Insurance Underwriters, Inc., is a corporation duly organized under the laws of the State of Wisconsin (herein collectively called the "Companies"), and that the Companies do hereby make, constitute and appoint

Pamela A. Nelson, Brian Hearst, Monica Tangeman-Gibbs, and Jeffrey L. Broyles

of the City of Seattle, State of Washington, their true and lawful Attorney(s)-in-Fact, each in their separate capacity if more than one is named above, to sign, execute, seal and acknowledge any and all bonds, recognizances, conditional undertakings and other writings obligatory in the nature thereof on behalf of the Companies in their business of guaranteeing the fidelity of persons, guaranteeing the performance of contracts and executing or guaranteeing bonds and undertakings required or permitted in any actions or proceedings allowed by law.

**IN WITNESS WHEREOF**, the Companies have caused this instrument to be signed and their corporate seals to be hereto affixed, this 26th day of October, 2015.

**Farmington Casualty Company**
**Fidelity and Guaranty Insurance Company**
**Fidelity and Guaranty Insurance Underwriters, Inc.**
**St. Paul Fire and Marine Insurance Company**
**St. Paul Guardian Insurance Company**
**St. Paul Mercury Insurance Company**
**Travelers Casualty and Surety Company**
**Travelers Casualty and Surety Company of America**
**United States Fidelity and Guaranty Company**

State of Connecticut
City of Hartford ss.

By: _____
Robert L. Raney, Senior Vice President

On this the 26th day of October, 2015, before me personally appeared Robert L. Raney, who acknowledged himself to be the Senior Vice President of Farmington Casualty Company, Fidelity and Guaranty Insurance Company, Fidelity and Guaranty Insurance Underwriters, Inc., St. Paul Fire and Marine Insurance Company, St. Paul Guardian Insurance Company, St. Paul Mercury Insurance Company, Travelers Casualty and Surety Company, Travelers Casualty and Surety Company of America, and United States Fidelity and Guaranty Company, and that he, as such, being authorized so to do, executed the foregoing instrument for the purposes therein contained by signing on behalf of the corporations by himself as a duly authorized officer.

**In Witness Whereof,** I hereunto set my hand and official seal.
My Commission expires the 30th day of June, 2016.

Marie C. Tetreault, Notary Public

58440-8-12 Printed in U.S.A.

WARNING: THIS POWER OF ATTORNEY IS INVALID WITHOUT THE RED BORDER

This Power of Attorney is granted under and by the authority of the following resolutions adopted by the Boards of Directors of Farmington Casualty Company, Fidelity and Guaranty Insurance Company, Fidelity and Guaranty Insurance Underwriters, Inc., St. Paul Fire and Marine Insurance Company, St. Paul Guardian Insurance Company, St. Paul Mercury Insurance Company, Travelers Casualty and Surety Company, Travelers Casualty and Surety Company of America, and United States Fidelity and Guaranty Company, which resolutions are now in full force and effect, reading as follows:

**RESOLVED**, that the Chairman, the President, any Vice Chairman, any Executive Vice President, any Senior Vice President, any Vice President, any Second Vice President, the Treasurer, any Assistant Treasurer, the Corporate Secretary or any Assistant Secretary may appoint Attorneys-in-Fact and Agents to act for and on behalf of the Company and may give such appointee such authority as his or her certificate of authority may prescribe to sign with the Company's name and seal with the Company's seal bonds, recognizances, contracts of indemnity, and other writings obligatory in the nature of a bond, recognizance, or conditional undertaking, and any of said officers or the Board of Directors at any time may remove any such appointee and revoke the power given him or her; and it is

**FURTHER RESOLVED**, that the Chairman, the President, any Vice Chairman, any Executive Vice President, any Senior Vice President or any Vice President may delegate all or any part of the foregoing authority to one or more officers or employees of this Company, provided that each such delegation is in writing and a copy thereof is filed in the office of the Secretary; and it is

**FURTHER RESOLVED**, that any bond, recognizance, contract of indemnity, or writing obligatory in the nature of a bond, recognizance, or conditional undertaking shall be valid and binding upon the Company when (a) signed by the President, any Vice Chairman, any Executive Vice President, any Senior Vice President or any Vice President, any Second Vice President, the Treasurer, any Assistant Treasurer, the Corporate Secretary or any Assistant Secretary and duly attested and sealed with the Company's seal by a Secretary or Assistant Secretary; or (b) duly executed (under seal, if required) by one or more Attorneys-in-Fact and Agents pursuant to the power prescribed in his or her certificate or their certificates of authority or by one or more Company officers pursuant to a written delegation of authority; and it is

**FURTHER RESOLVED**, that the signature of each of the following officers: President, any Executive Vice President, any Senior Vice President, any Vice President, any Assistant Vice President, any Secretary, any Assistant Secretary, and the seal of the Company may be affixed by facsimile to any Power of Attorney or to any certificate relating thereto appointing Resident Vice Presidents, Resident Assistant Secretaries or Attorneys-in-Fact for purposes only of executing and attesting bonds and undertakings and other writings obligatory in the nature thereof, and any such Power of Attorney or certificate bearing such facsimile signature or facsimile seal shall be valid and binding upon the Company and any such power so executed and certified by such facsimile signature and facsimile seal shall be valid and binding on the Company in the future with respect to any bond or understanding to which it is attached.

I, Kevin E. Hughes, the undersigned, Assistant Secretary, of Farmington Casualty Company, Fidelity and Guaranty Insurance Company, Fidelity and Guaranty Insurance Underwriters, Inc., St. Paul Fire and Marine Insurance Company, St. Paul Guardian Insurance Company, St. Paul Mercury Insurance Company, Travelers Casualty and Surety Company, Travelers Casualty and Surety Company of America, and United States Fidelity and Guaranty Company do hereby certify that the above and foregoing is a true and correct copy of the Power of Attorney executed by said Companies, which is in full force and effect and has not been revoked.

WARNING: THIS POWER OF ATTORNEY IS INVALID WITHOUT THE RED BORDER

**IN TESTIMONY WHEREOF**, I have hereunto set my hand and affixed the seals of said Companies this 22nd day of January, 2016.

Kevin E. Hughes, Assistant Secretary

To verify the authenticity of this Power of Attorney, call 1-800-421-3880 or contact us at www.travelersbond.com. Please refer to the Attorney-In-Fact number, the above-named individuals and the details of the bond to which the power is attached.

# FIRST-TIER DISCLOSURE STATEMENT

# FIRST-TIER DISCLOSURE STATEMENT

# FIRST-TIER SUBCONTRACTOR DISCLOSURE

PROJECT NAME: Molalla Avenue Improvements - Urban Renewal

BID #: 16-01

BID CLOSING: Date: 01/29/16 Time: 11am

This form must be submitted at the location specified in the Invitation to Bid on the advertised bid closing date and within two working hours after the advertised bid closing time.

List below the name of each subcontractor that will be furnishing labor or will be furnishing labor and materials and that is required to be disclosed, the category of work that the subcontractor will be performing and the dollar value of the subcontract. Enter "NONE" if there are no subcontractors that need to be disclosed. (ATTACH ADDITIONAL SHEETS IF NEEDED.)

| NAME | DOLLAR VALUE | CATEGORY OF WORK |
|---|---|---|
| (1) Signal Construction Group | $ 238970 | electrical |
| (2) Roy Houck Construction LLC | $ 178054.50 | paving |
| (3) Pacific Rim Construction | $ 266,589.50 | Concrete |
| (4) | $ | |
| (5) | $ | |
| (6) | $ | |
| (7) | $ | |
| (8) | $ | |
| (9) | $ | |

Failure to submit this form by the disclosure deadline will result in a non-responsive bid. A non-responsive bid will not be considered for award.

Form submitted by (bidder name): M.L. Houck Construction Co.

Contact name: Mike Houck Phone no.: (503) 463-7177

**ORS 279C.370 First-tier subcontractor disclosure.** (1)(a) Within two working hours after the date and time of the deadline when bids are due to a contracting agency for a public improvement contract, a bidder shall submit to the contracting agency a disclosure of the first-tier subcontractors that:

(A) Will be furnishing labor or will be furnishing labor and materials in connection with the public improvement contract; and

(B) Will have a contract value that is equal to or greater than five percent of the total project bid or $15,000, whichever is greater, or $350,000 regardless of the percentage of the total project bid.

(b) For each contract to which this subsection applies, the contracting agency shall designate a deadline for submission of bids that has a date on a Tuesday, Wednesday or Thursday and a time between 2 p.m. and 5 p.m., except that this paragraph does not apply to public contracts for maintenance or construction of highways, bridges or other transportation facilities.

(c) This subsection applies only to public improvement contracts **("projects")** with a value, estimated by the contracting agency, of more than **$100,000.**

(d) This subsection does not apply to public improvement contracts that have been exempted from competitive bidding requirements under ORS 279C.335 (2).

(2) The disclosure of first-tier subcontractors under subsection (1) of this section must include the name of each subcontractor, the category of work that each subcontractor will perform and the dollar value of each subcontract. The information shall be disclosed in substantially the following [above] form:

(3) A contracting agency shall accept the subcontractor disclosure. The contracting agency shall consider the bid of any contractor that does not submit a subcontractor disclosure to the contracting agency to be a non-responsive bid and may not award the contract to the contractor. A contracting agency is not required to determine the accuracy or the completeness of the subcontractor disclosure.

(4) After the bids are opened, the subcontractor disclosures must be made available for public inspection.

(5) A contractor may substitute a first-tier subcontractor under the provisions of ORS 279C.585.

(6) A subcontractor may file a complaint under ORS 279C.590 based on the disclosure requirements of subsection (1) of this section.

*This Page Intentionally Left Blank*

# CONTRACT FOR CONSTRUCTION

# CONTRACT FOR CONSTRUCTION

## CONTRACT FOR CONSTRUCTION

THIS AGREEMENT is dated as of the_____day of_____in the year 2016 by and between

City of Molalla
(hereinafter called OWNER) and

M.L. Houck Construction Co.
(hereinafter called CONTRACTOR)

OWNER and CONTRACTOR, in consideration of the mutual covenants hereinafter set forth, agree as follows:

### ARTICLE 1 — WORK

CONTRACTOR shall complete all Work as specified or indicated in the Contract Documents:

**City of Molalla**

**Molalla Avenue Improvements**

**Urban Renewal Project No. 16-01**

The scope of work consists of the following:

Approximately 2,000 lineal feet of roadway reconstruction with treated subgrade, curb & gutter, sidewalks, new ADA ramps and retrofits; removing and/or abandoning the existing waterline and replacing with new PVC C900 waterline; new stormwater drainage system; electrical conduit and junction box installation for an illumination system; signing and striping, and landscaping including tree grates and trees.

### ARTICLE 2 — ENGINEER

The Project has been designed by Murray, Smith & Associates, Inc., who is hereinafter called ENGINEER and who will assume all duties and responsibilities and will have the rights and authority assigned to ENGINEER in the Contract Documents in connection with completion of the Work in accordance with the Contract Documents.

## ARTICLE 3 — CONTRACT TIME

3.1 The Work will be substantially completed by November 30, 2016, with the potential of contract time extension due to inclement weather conditions after the date when the Contract Time commences to run as provided in Section 00130.90 of the Oregon Standard Specifications for Construction, 2015 Edition (hereto after referred to as the Standard Specification) and completed and ready for final payment in accordance with Section 00195.90 of the Standard Specifications within 30 days after the date when the issuance of the Certificate of Substantial Completion including punch list items.

3.2 Liquidated Damages: OWNER and CONTRACTOR recognize that time is of the essence of this Agreement and that OWNER will suffer financial loss if the Work is not substantially complete within the time specified in paragraph 3.1 above, plus any extensions thereof allowed in accordance with Section 00180.80 of the Standard Specifications. They also recognize the delays, expense and difficulties involved in proving in a legal proceeding the actual loss suffered by OWNER if the Work is not substantially completed on time.

Accordingly, instead of requiring any such proof, OWNER and CONTRACTOR agree that as liquidated damages for delay (but not as a penalty) CONTRACTOR shall pay OWNER or the OWNER may withhold from amounts due the CONTRACTOR One Thousand Dollars ($1,000.00) for each day that expires after the time specified in paragraph 3.1. for Substantial Completion until the Work is substantially complete AND/OR for each day of delay beyond the deadline for Final Completion.

## ARTICLE 4 — CONTRACT PRICE

4.1 OWNER shall pay CONTRACTOR for performance of the Work in accordance with the Contract Documents in current funds by check, an amount totaling

Two million fifty nine thousand five hundred fifty-one & oo/100 Dollars

($ 2,059,551.00 ) as shown in the attached Bid Proposal.

## ARTICLE 5 — PAYMENT PROCEDURES

CONTRACTOR shall submit Applications for Payment in accordance with Section 00195 of the Standard Specifications. Applications for Payment will be processed by ENGINEER as provided in the Standard Specifications.

5.1 Progress Payments: OWNER shall make progress payments on account of the Contract Price on the basis of CONTRACTOR'S Applications for Payment as recommended by ENGINEER, on or about the 25th day of each month during construction as provided below. All progress payments will be on the basis of the progress of the Work according to Section 00195.50 of the Standard Specifications.

5.1.1 Prior to Substantial Completion progress payments will be in an amount equal to:

(a) 95% of the Work completed; and

(b) 95% of materials and equipment not incorporated in the Work but delivered and suitably stored, less in each case the aggregate of payments previously made.

5.1.2 Upon Substantial Completion, OWNER shall pay an amount sufficient to increase total payments to CONTRACTOR to 100% of the value of the Contract Work completed, less such amounts as ENGINEER shall determine in accordance with Section 00195.50 of the Standard Specifications.

5.2 Final Payment: Upon final completion and acceptance of the Work in accordance with Section 00195.90 of the Standard Specifications, OWNER shall pay the remainder of the value of the Contract Work completed, as recommended by ENGINEER as provided in said Section 00195.90.

## ARTICLE 6 — INTEREST

All monies not paid when due hereunder shall bear interest at the maximum rate allowed by law at the place of the Project, when requested in accordance with ORS 279C.570.

## ARTICLE 7— CONTRACTOR'S REPRESENTATIONS

In order to induce OWNER to enter into this Agreement CONTRACTOR makes the following representations:

7.1 CONTRACTOR has familiarized himself with the nature and extent of the Contract Documents, Work, locality, and with all local conditions and federal, state and local laws, ordinances, rules and regulations that in any manner may affect cost, progress or performance of the Work.

7.2 CONTRACTOR has studied carefully all reports of investigations and tests of subsurface and latent physical conditions at the site or otherwise

affecting cost, progress or performance of the Work which were relied upon by ENGINEER in the preparation of the Drawings and Specifications and which have been identified in the Special Provisions.

7.3 CONTRACTOR has made or caused to be made examinations, investigations and tests and studies of such reports and related data in addition to those referred to in paragraph 7.2 as he deems necessary for the performance of the Work at the Contract Price, within the Contract Time and in accordance with the other terms and conditions of the Contract Documents; and no additional examinations, investigations, tests, reports or similar data are or will be required by CONTRACTOR for such purposes.

7.4 CONTRACTOR has correlated the results of all such observations, examinations, investigations, tests, reports and data with the terms and conditions of the Contract Documents.

7.5 CONTRACTOR has given ENGINEER written notice of all conflicts, errors or discrepancies that he has discovered in the Contract Documents and the written resolution thereof by ENGINEER is acceptable to CONTRACTOR.

## ARTICLE 8 — CONTRACT DOCUMENTS

8.1 This Agreement

8.2 Exhibits to this Agreement

8.3 Performance and other Bonds

8.4 Notice of Award

8.5 Project Plans (separate document)

8.6 Specifications bearing the following general title:

**Special Provisions For Highway Construction**

**City Of Molalla, Oregon**

**Grading, Drainage, Paving, Signing, Illumination, Water And Landscaping**

**Molalla Avenue Improvements**

**Urban Renewal Project No. 16-01**

**Clackamas County**

8.7 Addenda numbers 1, 2 and 3.

8.8 CONTRACTOR'S Bid

8.9 Any Modification, including Change Orders, duly delivered after execution of Agreement.

There are no Contract Documents other than those listed above in this ARTICLE 8. The Contract Documents may only be altered, amended or repealed as allowed per procedures outlined in the Standard Specifications.

## ARTICLE 9 — MISCELLANEOUS

9.1 Terms used in this Agreement which are defined in Section 00110 of the Standard Specifications shall have the meanings indicated in the Standard Specifications.

9.2 No assignment by a party hereto of any rights under or interests in the Contract Documents will be binding on another party hereto without the written consent of the party sought to be bound; and specifically by without limitation, moneys that may become due and moneys that are due may not be assigned without such consent (except to the extent that the effect of this restriction may be limited by law), and unless specifically stated to the contrary in any written consent to an assignment no assignment will release or discharge the assignor from any duty or responsibility under the Contract Documents.

9.3 OWNER and CONTRACTOR each binds himself, his partners, successors, assigns and legal representatives to the other party hereto, his partners, successors, assigns and legal representatives in respect to all covenants, agreements and obligations contained in the Contract Documents.

9.4 In the event a suit, arbitration or other legal action is required by either the OWNER or the CONTRACTOR to enforce any provisions of this Agreement, the prevailing parties shall be entitled to all reasonable costs and reasonable attorney's fees upon trial or subsequent appeal.

IN WITNESS WHEREOF, the parties hereto have signed three counterparts of this Agreement.

This Agreement will be effective on February 18, 2016.

OWNER:

**City of Molalla**
**PO Box 248**
**117 N. Molalla Avenue**
**Molalla, OR 97038**

CONTRACTOR:

M.L. Houck Construction Co.
4444 22nd Ave NE
Salem OR 97301

By: _____ Name/Title: DAN HUFF, CITY MANAGER

M.L. HOUCK CONSTRUCTION CO.

By: _____ Name/Title: Pamela Houck / Vice President

Attest: _____ Name/Title: Sarah Kennedy / Asst. Secretary

Address for giving notices: 4444 22nd Ave NE
Salem OR 97301

# CONSTRUCTION PERFORMANCE BOND

# CONSTRUCTION PERFOMANCE BOND

EJCDC
ENGINEERS JOINT CONTRACT DOCUMENTS COMMITTEE

# PERFORMANCE BOND

CONTRACTOR *(name and address)*:
M.L. HOUCK CONSTRUCTION CO.
4444 22nd Ave. N.E.
Salem, OR 97301

SURETY *(name and address of principal place of business)*:
TRAVELERS CASUALTY AND SURETY COMPANY OF AMERICA
One Tower Square
Hartford, CT 06183

OWNER *(name and address)*:
CITY OF MOLALLA
117 N. Molalla Avenue, Molalla, OR 97038

CONSTRUCTION CONTRACT
Effective Date of the Agreement: Feb. 18, 2016
Amount: Two Million Fifty-Nine Thousand Five Hundred Fifty-One and No/100ths --- Dollars ($2,059,551.00)
Description *(name and location)*: Molalla Avenue Improvements
Urban Renewal Project No. 16-01

BOND
Bond Number: 106449808 (Executed in Triplicate)
Date *(not earlier than the Effective Date of the Agreement of the Construction Contract)*: Feb. 18, 2016
Amount: Two Million Fifty-Nine Thousand Five Hundred Fifty-One and No/100ths --- Dollars ($2,059,551.00)
Modifications to this Bond Form: [XX] None [ ] See Paragraph 16

Surety and Contractor, intending to be legally bound hereby, subject to the terms set forth below, do each cause this Performance Bond to be duly executed by an authorized officer, agent, or representative.

**CONTRACTOR AS PRINCIPAL**

M.L. HOUCK CONSTRUCTION CO. *(seal)*
Contractor's Name and Corporate Seal

By: Pamela Houck
Signature

Pamela Houck
Print Name

Vice President
Title

Attest: Sarah Kennedy
Signature

Asst. Secretary
Title

**SURETY**

TRAVELERS CASUALTY AND SURETY COMPANY OF AMERICA *(seal)*
Surety's Name and Corporate Seal

By: Pamela A. Nelson
Signature *(attach power of attorney)*

Pamela A. Nelson
Print Name

Attorney-in-Fact
Title

Attest: [signature]
Signature

Witness
Title

*Notes: (1) Provide supplemental execution by any additional parties, such as joint venturers. (2) Any singular reference to Contractor, Surety, Owner, or other party shall be considered plural where applicable.*


Copyright © 2013 National Society of Professional Engineers, American Council of Engineering Companies, and American Society of Civil Engineers. All rights reserved.

1. The Contractor and Surety, jointly and severally, bind themselves, their heirs, executors, administrators, successors, and assigns to the Owner for the performance of the Construction Contract, which is incorporated herein by reference.

2. If the Contractor performs the Construction Contract, the Surety and the Contractor shall have no obligation under this Bond, except when applicable to participate in a conference as provided in Paragraph 3.

3. If there is no Owner Default under the Construction Contract, the Surety's obligation under this Bond shall arise after:

3.1 The Owner first provides notice to the Contractor and the Surety that the Owner is considering declaring a Contractor Default. Such notice shall indicate whether the Owner is requesting a conference among the Owner, Contractor, and Surety to discuss the Contractor's performance. If the Owner does not request a conference, the Surety may, within five (5) business days after receipt of the Owner's notice, request such a conference. If the Surety timely requests a conference, the Owner shall attend. Unless the Owner agrees otherwise, any conference requested under this Paragraph 3.1 shall be held within ten (10) business days of the Surety's receipt of the Owner's notice. If the Owner, the Contractor, and the Surety agree, the Contractor shall be allowed a reasonable time to perform the Construction Contract, but such an agreement shall not waive the Owner's right, if any, subsequently to declare a Contractor Default;

3.2 The Owner declares a Contractor Default, terminates the Construction Contract and notifies the Surety; and

3.3 The Owner has agreed to pay the Balance of the Contract Price in accordance with the terms of the Construction Contract to the Surety or to a contractor selected to perform the Construction Contract.

4. Failure on the part of the Owner to comply with the notice requirement in Paragraph 3.1 shall not constitute a failure to comply with a condition precedent to the Surety's obligations, or release the Surety from its obligations, except to the extent the Surety demonstrates actual prejudice.

5. When the Owner has satisfied the conditions of Paragraph 3, the Surety shall promptly and at the Surety's expense take one of the following actions:

5.1 Arrange for the Contractor, with the consent of the Owner, to perform and complete the Construction Contract;

5.2 Undertake to perform and complete the Construction Contract itself, through its agents or independent contractors;

5.3 Obtain bids or negotiated proposals from qualified contractors acceptable to the Owner for a contract for performance and completion of the Construction Contract, arrange for a contract to be prepared for execution by the Owner and a contractor selected with the Owners concurrence, to be secured with performance and payment bonds executed by a qualified surety equivalent to the bonds issued on the Construction Contract, and pay to the Owner the amount of damages as described in Paragraph 7 in excess of the Balance of the Contract Price incurred by the Owner as a result of the Contractor Default; or

5.4 Waive its right to perform and complete, arrange for completion, or obtain a new contractor, and with reasonable promptness under the circumstances:

5.4.1 After investigation, determine the amount for which it may be liable to the Owner and, as soon as practicable after the amount is determined, make payment to the Owner; or

5.4.2 Deny liability in whole or in part and notify the Owner, citing the reasons for denial.

6. If the Surety does not proceed as provided in Paragraph 5 with reasonable promptness, the Surety shall be deemed to be in default on this Bond seven days after receipt of an additional written notice from the Owner to the Surety demanding that the Surety perform its obligations under this Bond, and the Owner shall be entitled to enforce any remedy available to the Owner. If the Surety proceeds as provided in Paragraph 5.4, and the Owner refuses the payment or the Surety has denied liability, in whole or in part, without further notice the Owner shall be entitled to enforce any remedy available to the Owner.

7. If the Surety elects to act under Paragraph 5.1, 5.2, or 5.3, then the responsibilities of the Surety to the Owner shall not be greater than those of the Contractor under the Construction Contract, and the responsibilities of the Owner to the Surety shall not be greater than those of the Owner under the Construction Contract. Subject to the commitment by the Owner to pay the Balance of the Contract Price, the Surety is obligated, without duplication for:

7.1 the responsibilities of the Contractor for correction of defective work and completion of the Construction Contract;

7.2 additional legal, design professional, and delay costs resulting from the Contractor's Default, and resulting from the actions or failure to act of the Surety under Paragraph 5; and

7.3 liquidated damages, or if no liquidated damages are specified in the Construction Contract, actual damages caused by delayed performance or non-performance of the Contractor.

8. If the Surety elects to act under Paragraph 5.1, 5.3, or 5.4, the Surety's liability is limited to the amount of this Bond.

9. The Surety shall not be liable to the Owner or others for obligations of the Contractor that are unrelated to the Construction Contract, and the Balance of the Contract Price shall not be reduced or set off on account of any such unrelated obligations. No right of action shall accrue on this Bond to any person or entity other than


Copyright © 2013 National Society of Professional Engineers, American Council of Engineering Companies, and American Society of Civil Engineers. All rights reserved.

the Owner or its heirs, executors, administrators, successors, and assigns.

10. The Surety hereby waives notice of any change, including changes of time, to the Construction Contract or to related subcontracts, purchase orders, and other obligations.

11. Any proceeding, legal or equitable, under this Bond may be instituted in any court of competent jurisdiction in the location in which the work or part of the work is located and shall be instituted within two years after a declaration of Contractor Default or within two years after the Contractor ceased working or within two years after the Surety refuses or fails to perform its obligations under this Bond, whichever occurs first. If the provisions of this paragraph are void or prohibited by law, the minimum periods of limitations available to sureties as a defense in the jurisdiction of the suit shall be applicable.

12. Notice to the Surety, the Owner, or the Contractor shall be mailed or delivered to the address shown on the page on which their signature appears.

13. When this Bond has been furnished to comply with a statutory or other legal requirement in the location where the construction was to be performed, any provision in this Bond conflicting with said statutory or legal requirement shall be deemed deleted herefrom and provisions conforming to such statutory or other legal requirement shall be deemed incorporated herein. When so furnished, the intent is that this Bond shall be construed as a statutory bond and not as a common law bond.

14. Definitions

14.1 Balance of the Contract Price: The total amount payable by the Owner to the Contractor under the Construction Contract after all proper adjustments have been made including allowance for the Contractor for any amounts received or to be received by the Owner in settlement of insurance or other claims for damages to which the Contractor is entitled, reduced by all valid and proper payments made to or on behalf of the Contractor under the Construction Contract.

14.2 Construction Contract: The agreement between the Owner and Contractor identified on the cover page, including all Contract Documents and changes made to the agreement and the Contract Documents.

14.3 Contractor Default: Failure of the Contractor, which has not been remedied or waived, to perform or otherwise to comply with a material term of the Construction Contract.

14.4 Owner Default: Failure of the Owner, which has not been remedied or waived, to pay the Contractor as required under the Construction Contract or to perform and complete or comply with the other material terms of the Construction Contract.

14.5 Contract Documents: All the documents that comprise the agreement between the Owner and Contractor.

15. If this Bond is issued for an agreement between a contractor and subcontractor, the term Contractor in this Bond shall be deemed to be Subcontractor and the term Owner shall be deemed to be Contractor.

16. Modifications to this Bond are as follows:


Copyright © 2013 National Society of Professional Engineers, American Council of Engineering Companies, and American Society of Civil Engineers. All rights reserved.

*This Page Intentionally Left Blank*

# CONSTRUCTION PAYMENT BOND

# CONSTRUCTION PAYMENT BOND

EJCDC
ENGINEERS JOINT CONTRACT DOCUMENTS COMMITTEE

# PAYMENT BOND

CONTRACTOR *(name and address)*:
M.L. HOUCK CONSTRUCTION CO.
4444 22nd Ave. N.E.
Salem, OR 97301

SURETY *(name and address of principal place of business)*:
TRAVELERS CASUALTY AND SURETY COMPANY OF AMERICA
One Tower Square
Hartford, CT 06183

OWNER *(name and address)*: CITY OF MOLALLA
117 N. Molalla Avenue, Molalla, OR 97038

CONSTRUCTION CONTRACT

Effective Date of the Agreement: Feb. 18, 2016

Amount: Two Million Fifty-Nine Thousand Five Hundred Fifty-One and no/100ths --- Dollars ($2,059,551.00)

Description *(name and location)*: Molalla Avenue Improvements
Urban Renewal Project No. 16-01

BOND

Bond Number: 106449808 (Executed in Triplicate)

Date *(not earlier than the Effective Date of the Agreement of the Construction Contract)*: Feb. 18, 2016

Amount: Two Million Fifty-Nine Thousand Five Hundred Fifty-One and No/100ths --- Dollars ($2,059,551.00)

Modifications to this Bond Form: [XX] None [ ] See Paragraph 18

Surety and Contractor, intending to be legally bound hereby, subject to the terms set forth below, do each cause this Payment Bond to be duly executed by an authorized officer, agent, or representative.

**CONTRACTOR AS PRINCIPAL**

M.L. HOUCK CONSTRUCTION CO. *(seal)*
Contractor's Name and Corporate Seal

By: Pamela Houck
Signature

Pamela Houck
Print Name

Vice President
Title

Attest: Sarah Kennedy
Signature

Asst. Secretary
Title

**SURETY**

TRAVELERS CASUALTY AND SURETY COMPANY OF AMERICA *(seal)*
Surety's Name and Corporate Seal

By: Pamela A. Nelson
Signature *(attach power of attorney)*

Pamela A. Nelson
Print Name

Attorney-in-Fact
Title

Attest: [illegible]
Signature

Witness
Title

***Notes: (1) Provide supplemental execution by any additional parties, such as joint venturers. (2) Any singular reference to Contractor, Surety, Owner, or other party shall be considered plural where applicable.***


Copyright © 2013 National Society of Professional Engineers, American Council of Engineering Companies, and American Society of Civil Engineers. All rights reserved.

1. The Contractor and Surety, jointly and severally, bind themselves, their heirs, executors, administrators, successors, and assigns to the Owner to pay for labor, materials, and equipment furnished for use in the performance of the Construction Contract, which is incorporated herein by reference, subject to the following terms.

2. If the Contractor promptly makes payment of all sums due to Claimants, and defends, indemnifies, and holds harmless the Owner from claims, demands, liens, or suits by any person or entity seeking payment for labor, materials, or equipment furnished for use in the performance of the Construction Contract, then the Surety and the Contractor shall have no obligation under this Bond.

3. If there is no Owner Default under the Construction Contract, the Surety's obligation to the Owner under this Bond shall arise after the Owner has promptly notified the Contractor and the Surety (at the address described in Paragraph 13) of claims, demands, liens, or suits against the Owner or the Owner's property by any person or entity seeking payment for labor, materials, or equipment furnished for use in the performance of the Construction Contract, and tendered defense of such claims, demands, liens, or suits to the Contractor and the Surety.

4. When the Owner has satisfied the conditions in Paragraph 3, the Surety shall promptly and at the Surety's expense defend, indemnify, and hold harmless the Owner against a duly tendered claim, demand, lien, or suit.

5. The Surety's obligations to a Claimant under this Bond shall arise after the following:

   5.1 Claimants who do not have a direct contract with the Contractor,

      5.1.1 have furnished a written notice of non-payment to the Contractor, stating with substantial accuracy the amount claimed and the name of the party to whom the materials were, or equipment was, furnished or supplied or for whom the labor was done or performed, within ninety (90) days after having last performed labor or last furnished materials or equipment included in the Claim; and

      5.1.2 have sent a Claim to the Surety (at the address described in Paragraph 13).

   5.2 Claimants who are employed by or have a direct contract with the Contractor have sent a Claim to the Surety (at the address described in Paragraph 13).

6. If a notice of non-payment required by Paragraph 5.1.1 is given by the Owner to the Contractor, that is sufficient to satisfy a Claimant's obligation to furnish a written notice of non-payment under Paragraph 5.1.1.

7. When a Claimant has satisfied the conditions of Paragraph 5.1 or 5.2, whichever is applicable, the Surety shall promptly and at the Surety's expense take the following actions:

   7.1 Send an answer to the Claimant, with a copy to the Owner, within sixty (60) days after receipt of the Claim, stating the amounts that are undisputed and the basis for challenging any amounts that are disputed; and

   7.2 Pay or arrange for payment of any undisputed amounts.

   7.3 The Surety's failure to discharge its obligations under Paragraph 7.1 or 7.2 shall not be deemed to constitute a waiver of defenses the Surety or Contractor may have or acquire as to a Claim, except as to undisputed amounts for which the Surety and Claimant have reached agreement. If, however, the Surety fails to discharge its obligations under Paragraph 7.1 or 7.2, the Surety shall indemnify the Claimant for the reasonable attorney's fees the Claimant incurs thereafter to recover any sums found to be due and owing to the Claimant.

8. The Surety's total obligation shall not exceed the amount of this Bond, plus the amount of reasonable attorney's fees provided under Paragraph 7.3, and the amount of this Bond shall be credited for any payments made in good faith by the Surety.

9. Amounts owed by the Owner to the Contractor under the Construction Contract shall be used for the performance of the Construction Contract and to satisfy claims, if any, under any construction performance bond. By the Contractor furnishing and the Owner accepting this Bond, they agree that all funds earned by the Contractor in the performance of the Construction Contract are dedicated to satisfy obligations of the Contractor and Surety under this Bond, subject to the Owner's priority to use the funds for the completion of the work.

10. The Surety shall not be liable to the Owner, Claimants, or others for obligations of the Contractor that are unrelated to the Construction Contract. The Owner shall not be liable for the payment of any costs or expenses of any Claimant under this Bond, and shall have under this Bond no obligation to make payments to or give notice on behalf of Claimants, or otherwise have any obligations to Claimants under this Bond.

11. The Surety hereby waives notice of any change, including changes of time, to the Construction Contract or to related subcontracts, purchase orders, and other obligations.


Copyright © 2013 National Society of Professional Engineers, American Council of Engineering Companies, and American Society of Civil Engineers. All rights reserved.

12. No suit or action shall be commenced by a Claimant under this Bond other than in a court of competent jurisdiction in the state in which the project that is the subject of the Construction Contract is located or after the expiration of one year from the date (1) on which the Claimant sent a Claim to the Surety pursuant to Paragraph 5.1.2 or 5.2, or (2) on which the last labor or service was performed by anyone or the last materials or equipment were furnished by anyone under the Construction Contract, whichever of (1) or (2) first occurs. If the provisions of this paragraph are void or prohibited by law, the minimum period of limitation available to sureties as a defense in the jurisdiction of the suit shall be applicable.

13. Notice and Claims to the Surety, the Owner, or the Contractor shall be mailed or delivered to the address shown on the page on which their signature appears. Actual receipt of notice or Claims, however accomplished, shall be sufficient compliance as of the date received.

14. When this Bond has been furnished to comply with a statutory or other legal requirement in the location where the construction was to be performed, any provision in this Bond conflicting with said statutory or legal requirement shall be deemed deleted herefrom and provisions conforming to such statutory or other legal requirement shall be deemed incorporated herein. When so furnished, the intent is that this Bond shall be construed as a statutory bond and not as a common law bond.

15. Upon requests by any person or entity appearing to be a potential beneficiary of this Bond, the Contractor and Owner shall promptly furnish a copy of this Bond or shall permit a copy to be made.

16. Definitions

16.1 Claim: A written statement by the Claimant including at a minimum:

1. The name of the Claimant;
2. The name of the person for whom the labor was done, or materials or equipment furnished;
3. A copy of the agreement or purchase order pursuant to which labor, materials, or equipment was furnished for use in the performance of the Construction Contract;
4. A brief description of the labor, materials, or equipment furnished;
5. The date on which the Claimant last performed labor or last furnished materials or equipment for use in the performance of the Construction Contract;
6. The total amount earned by the Claimant for labor, materials, or equipment furnished as of the date of the Claim;
7. The total amount of previous payments received by the Claimant; and
8. The total amount due and unpaid to the Claimant for labor, materials, or equipment furnished as of the date of the Claim.

16.2 Claimant: An individual or entity having a direct contract with the Contractor or with a subcontractor of the Contractor to furnish labor, materials, or equipment for use in the performance of the Construction Contract. The term Claimant also includes any individual or entity that has rightfully asserted a claim under an applicable mechanic's lien or similar statute against the real property upon which the Project is located. The intent of this Bond shall be to include without limitation in the terms of "labor, materials, or equipment" that part of the water, gas, power, light, heat, oil, gasoline, telephone service, or rental equipment used in the Construction Contract, architectural and engineering services required for performance of the work of the Contractor and the Contractor's subcontractors, and all other items for which a mechanic's lien may be asserted in the jurisdiction where the labor, materials, or equipment were furnished.

16.3 Construction Contract: The agreement between the Owner and Contractor identified on the cover page, including all Contract Documents and all changes made to the agreement and the Contract Documents.

16.4 Owner Default: Failure of the Owner, which has not been remedied or waived, to pay the Contractor as required under the Construction Contract or to perform and complete or comply with the other material terms of the Construction Contract.

16.5 Contract Documents: All the documents that comprise the agreement between the Owner and Contractor.

17. If this Bond is issued for an agreement between a contractor and subcontractor, the term Contractor in this Bond shall be deemed to be Subcontractor and the term Owner shall be deemed to be Contractor.

18. Modifications to this Bond are as follows:


Copyright © 2013 National Society of Professional Engineers, American Council of Engineering Companies, and American Society of Civil Engineers. All rights reserved.

WARNING: THIS POWER OF ATTORNEY IS INVALID WITHOUT THE RED BORDER

TRAVELERS

# POWER OF ATTORNEY

**Farmington Casualty Company**
**Fidelity and Guaranty Insurance Company**
**Fidelity and Guaranty Insurance Underwriters, Inc.**
**St. Paul Fire and Marine Insurance Company**
**St. Paul Guardian Insurance Company**

**St. Paul Mercury Insurance Company**
**Travelers Casualty and Surety Company**
**Travelers Casualty and Surety Company of America**
**United States Fidelity and Guaranty Company**

**Attorney-In Fact No.** 229464

**Certificate No.** 006584694

**KNOW ALL MEN BY THESE PRESENTS**: That Farmington Casualty Company, St. Paul Fire and Marine Insurance Company, St. Paul Guardian Insurance Company, St. Paul Mercury Insurance Company, Travelers Casualty and Surety Company, Travelers Casualty and Surety Company of America, and United States Fidelity and Guaranty Company are corporations duly organized under the laws of the State of Connecticut, that Fidelity and Guaranty Insurance Company is a corporation duly organized under the laws of the State of Iowa, and that Fidelity and Guaranty Insurance Underwriters, Inc., is a corporation duly organized under the laws of the State of Wisconsin (herein collectively called the "Companies"), and that the Companies do hereby make, constitute and appoint

Pamela A. Nelson, Brian Hearst, Monica Tangeman-Gibbs, and Jeffrey L. Broyles

of the City of Seattle, State of Washington, their true and lawful Attorney(s)-in-Fact, each in their separate capacity if more than one is named above, to sign, execute, seal and acknowledge any and all bonds, recognizances, conditional undertakings and other writings obligatory in the nature thereof on behalf of the Companies in their business of guaranteeing the fidelity of persons, guaranteeing the performance of contracts and executing or guaranteeing bonds and undertakings required or permitted in any actions or proceedings allowed by law.

**IN WITNESS WHEREOF**, the Companies have caused this instrument to be signed and their corporate seals to be hereto affixed, this 26th day of October, 2015.

**Farmington Casualty Company**
**Fidelity and Guaranty Insurance Company**
**Fidelity and Guaranty Insurance Underwriters, Inc.**
**St. Paul Fire and Marine Insurance Company**
**St. Paul Guardian Insurance Company**

**St. Paul Mercury Insurance Company**
**Travelers Casualty and Surety Company**
**Travelers Casualty and Surety Company of America**
**United States Fidelity and Guaranty Company**

State of Connecticut
City of Hartford ss.

By: _____
Robert L. Raney, Senior Vice President

On this the 26th day of October, 2015, before me personally appeared Robert L. Raney, who acknowledged himself to be the Senior Vice President of Farmington Casualty Company, Fidelity and Guaranty Insurance Company, Fidelity and Guaranty Insurance Underwriters, Inc., St. Paul Fire and Marine Insurance Company, St. Paul Guardian Insurance Company, St. Paul Mercury Insurance Company, Travelers Casualty and Surety Company, Travelers Casualty and Surety Company of America, and United States Fidelity and Guaranty Company, and that he, as such, being authorized so to do, executed the foregoing instrument for the purposes therein contained by signing on behalf of the corporations by himself as a duly authorized officer.

**In Witness Whereof,** I hereunto set my hand and official seal.
My Commission expires the 30th day of June, 2016.

Marie C. Tetreault, Notary Public

58440-8-12 Printed in U.S.A.

WARNING: THIS POWER OF ATTORNEY IS INVALID WITHOUT THE RED BORDER

This Power of Attorney is granted under and by the authority of the following resolutions adopted by the Boards of Directors of Farmington Casualty Company, Fidelity and Guaranty Insurance Company, Fidelity and Guaranty Insurance Underwriters, Inc., St. Paul Fire and Marine Insurance Company, St. Paul Guardian Insurance Company, St. Paul Mercury Insurance Company, Travelers Casualty and Surety Company, Travelers Casualty and Surety Company of America, and United States Fidelity and Guaranty Company, which resolutions are now in full force and effect, reading as follows:

**RESOLVED**, that the Chairman, the President, any Vice Chairman, any Executive Vice President, any Senior Vice President, any Vice President, any Second Vice President, the Treasurer, any Assistant Treasurer, the Corporate Secretary or any Assistant Secretary may appoint Attorneys-in-Fact and Agents to act for and on behalf of the Company and may give such appointee such authority as his or her certificate of authority may prescribe to sign with the Company's name and seal with the Company's seal bonds, recognizances, contracts of indemnity, and other writings obligatory in the nature of a bond, recognizance, or conditional undertaking, and any of said officers or the Board of Directors at any time may remove any such appointee and revoke the power given him or her; and it is

**FURTHER RESOLVED**, that the Chairman, the President, any Vice Chairman, any Executive Vice President, any Senior Vice President or any Vice President may delegate all or any part of the foregoing authority to one or more officers or employees of this Company, provided that each such delegation is in writing and a copy thereof is filed in the office of the Secretary; and it is

**FURTHER RESOLVED**, that any bond, recognizance, contract of indemnity, or writing obligatory in the nature of a bond, recognizance, or conditional undertaking shall be valid and binding upon the Company when (a) signed by the President, any Vice Chairman, any Executive Vice President, any Senior Vice President or any Vice President, any Second Vice President, the Treasurer, any Assistant Treasurer, the Corporate Secretary or any Assistant Secretary and duly attested and sealed with the Company's seal by a Secretary or Assistant Secretary; or (b) duly executed (under seal, if required) by one or more Attorneys-in-Fact and Agents pursuant to the power prescribed in his or her certificate or their certificates of authority or by one or more Company officers pursuant to a written delegation of authority; and it is

**FURTHER RESOLVED**, that the signature of each of the following officers: President, any Executive Vice President, any Senior Vice President, any Vice President, any Assistant Vice President, any Secretary, any Assistant Secretary, and the seal of the Company may be affixed by facsimile to any Power of Attorney or to any certificate relating thereto appointing Resident Vice Presidents, Resident Assistant Secretaries or Attorneys-in-Fact for purposes only of executing and attesting bonds and undertakings and other writings obligatory in the nature thereof, and any such Power of Attorney or certificate bearing such facsimile signature or facsimile seal shall be valid and binding upon the Company and any such power so executed and certified by such facsimile signature and facsimile seal shall be valid and binding on the Company in the future with respect to any bond or understanding to which it is attached.

I, Kevin E. Hughes, the undersigned, Assistant Secretary, of Farmington Casualty Company, Fidelity and Guaranty Insurance Company, Fidelity and Guaranty Insurance Underwriters, Inc., St. Paul Fire and Marine Insurance Company, St. Paul Guardian Insurance Company, St. Paul Mercury Insurance Company, Travelers Casualty and Surety Company, Travelers Casualty and Surety Company of America, and United States Fidelity and Guaranty Company do hereby certify that the above and foregoing is a true and correct copy of the Power of Attorney executed by said Companies, which is in full force and effect and has not been revoked.

WARNING THIS POWER ATTORNEY IS INVALID WITHOUT THE RED BORDER

**IN TESTIMONY WHEREOF**, I have hereunto set my hand and affixed the seals of said Companies this 18 day of February, 20 16.

Kevin E. Hughes, Assistant Secretary

To verify the authenticity of this Power of Attorney, call 1-800-421-3880 or contact us at www.travelersbond.com. Please refer to the Attorney-In-Fact number, the above-named individuals and the details of the bond to which the power is attached.

*This Page Intentionally Left Blank*

# PREVAILING WAGE RATE FORMS

# PREVAILING WAGE RATE FORMS

## PREVAILING WAGE RATES FOR PUBLIC WORKS CONSTRUCTION

This project is subject to the State of OREGON BOLI Prevailing Wage Rates, effective January 1, 2016.

The current Prevailing Wage Rate Book is available online and can be viewed and printed in its entirety at: http://www.oregon.gov/boli/WHD/PWR/Pages/January_2016_Index.aspx

*This Page Intentionally Left Blank*

# PROJECT SPECIFICATIONS

# PROJECT SPECIFICATIONS

*Construction to comply with the ODOT/APWA 2015 Standard Specifications for Construction in addition to the following Special Provisions*

# SPECIAL PROVISIONS
# FOR HIGHWAY CONSTRUCTION

## CITY OF MOLALLA
## OREGON

**GRADING, DRAINAGE, PAVING, SIGNING, ILLUMINATION, WATER AND LANDSCAPING**

**MOLALLA AVENUE IMPROVEMENTS**

**URBAN RENEWAL PROJECT NO. 16-01**

**CLACKAMAS COUNTY**

**January 29, 2016**

## DESCRIPTION OF WORK

Grading, Drainage, Paving, Signing, Illumination, Water And Landscaping
Molalla Avenue Improvements
Urban Renewal Project No. 16-01
Clackamas County

## TIMES AND PLACES OF RECEIVING BIDS (BID CLOSING)

Bid closing for the work described above will be 11:00:00 a.m. on the 29th day of January, 2016. Bids will be received by Sadie Cramer, City Recorder, at the following times and places:

Before 11:00:00 a.m., per City Hall clock, on the day of the Bid Closing:

Molalla City Hall
117 N Molalla Avenue
Molalla, Oregon 97038

Bids, Bid modifications, and Bid withdrawals will not be accepted after 11:00:00 a.m. on the day of Bid Closing.

The official time will be the clock at City Hall.

## PLACE, TIME, AND DATE OF READING BIDS (BID OPENING)

Bid Opening for the work described above will be at the same location as the place for receiving bids as soon after 11:00:00 a.m., on the day of Bid Closing, as can be accomplished.

## COMPLETION TIME LIMIT

Complete all Work to be done under the Contract by November 30, 2016.

## CLASS OF PROJECT

This is a City Funded Project.

## CLASS OF WORK

The Class of Work for this Project is Earthwork and Drainage or Miscellaneous Highway Appurtenances.

## PROJECT INFORMATION

Information pertaining to this Project may be obtained from the following:

Jennifer Cline, Public Works Director, City of Molalla, 117 N Molalla Avenue, Molalla, OR 97038; Email JCline@cityofmolalla.com, or Fax 503-829-3676. All requests for information must be in writing with reference to the Project name.

Chris Link, Project Manager, Murray, Smith & Associates, Inc., 777 High Street, Suite 200, Eugene, OR 97401; Email Chris.Link@msa-ep.com, or Fax 541-744-3875. All requests for information must be in writing with reference to the Project name.

## SPECIAL PROVISIONS

## FOR

Grading, Drainage, Paving, Signing, Illumination, Water And Landscaping
Molalla Avenue Improvements
Urban Renewal Project No. 16-01
Clackamas County

## PROFESSIONAL OF RECORD CERTIFICATIONS(S):

| | |
|---|---|
| Seal w/signature<br>REGISTERED PROFESSIONAL ENGINEER 56,075 OREGON MARCH 14, 2006 RANDALL P. STARK<br>Randall P. Stark | I certify the Special Provision Section(s) listed below are applicable to the design for the subject project for Roadway Design. Modified Special Provisions were prepared by my or under my supervision.<br><br>Section 00110, 00120, 00130, 00140, 00150, 00160, 00165, 00170, 00180, 00190, 00195, 00196, 00197, 00199, 00210, 00225, 00280, 00290, 00305, 00310, 00320, 00330, 00344, 00350, 00440, 00495, 00641, 00730, 00744, 00759, 00850, 00860, 00867, 00905, 00910, 00920, 00930, 00940, 01070, 02010, 02050, 02055, 02320, 02560, 02910 |
| Date Signed: 01-05-2016 | |

## PROFESSIONAL OF RECORD CERTIFICATIONS(S):

| | |
|---|---|
| Seal w/signature<br> <br> | I certify the Special Provision Section(s) listed below are applicable to the design for the subject project for Water and Sewer Design. Modified Special Provisions were prepared by my or under my supervision.<br><br>Section 00295, 00405, 00415, 00440, 00445, 00470, 00490, 01140, 01150, 01160, 01170, 02010, 02050, 02450, 02470, 02475, 02480, 02485, 02490, 02560 |
| Date Signed: 1-5-2016 | |

## PROFESSIONAL OF RECORD CERTIFICATIONS(S):

| | |
|---|---|
| Seal w/signature<br> <br><br>Date Signed: 01-05-2016 | I certify the Special Provision Section(s) listed below are applicable to the design for the subject project for Illumination Design. Modified Special Provisions were prepared by my or under my supervision.<br><br>Section 00960, 00964 |

## PROFESSIONAL OF RECORD CERTIFICATIONS(S):

| | |
|---|---|
| Seal w/signature<br>REGISTERED 440 JOHN A. NUTTBROCK OREGON 11-12-1999 LANDSCAPE ARCHITECT | I certify the Special Provision Section(s) listed below are applicable to the design for the subject project for Landscape Design. Modified Special Provisions were prepared by my or under my supervision.<br><br>Section 01030, 01040, 01120 |
| Date Signed: 01·04·16 | |

| | |
|---|---|
| Seal w/signature<br>REGISTERED PROFESSIONAL ENGINEER 85811PE OREGON NOV. 9, 2011 JOHN ANDREW MANIX<br>EXPIRES: DECEMBER 31, 2016 | I certify the Special Provision Section(s) listed below are applicable to the design for the subject project for Landscape Electrical Design. Modified Special Provisions were prepared by my or under my supervision.<br><br>Section 00967 |
| Date Signed: 01/04/2016 | |

**SPECIAL PROVISIONS**

## WORK TO BE DONE

The Work to be done under this Contract consists of the following on the Molalla Urban Renewal Project Section of the Molalla Avenue Roadway in the City of Molalla in Clackamas County:

1. Excavation and removal of existing asphalt concrete and PCC roadway.
2. Treatment of subgrade.
3. Construction of drainage systems for storm sewers.
4. Construction of water main and services.
5. Selective repair of the existing sanitary sewer.
6. Installation of aggregate base.
7. Construction of asphalt pavement.
8. Construction of curb and gutters, sidewalks, and curb ramps.
9. Installation of street lighting illumination conduit and junction boxes.
10. Installation of roadway signing.
11. Installation of roadway striping.
12. Installation of landscaping.
13. Performance of additional and incidental Work as called for by the Specifications and Plans.

## APPLICABLE SPECIFICATIONS

The Specifications that are applicable to the Work on this Project is the 2015 edition of the "Oregon Standard Specifications for Construction".

All number references in these Special Provisions shall be understood to refer to the Sections and subsections of the Standard Specifications bearing like numbers and to Sections and subsections contained in these Special Provisions in their entirety.

## CLASS OF PROJECT

This is a City Funded Project.

## SECTION 00110 - ORGANIZATION, CONVENTIONS, ABBREVIATIONS AND DEFINITIONS

Comply with Section 00110 of the Standard Specifications, modified as follows:

**00110.20 Definitions** – add the following definitions:

**Engineer** – The City Public Works Director and/or the Consulting Engineer appointed by the City Public Works Director.

**Geotechnical Engineer** – The Consulting Geotechnical Engineer appointed by the City Public Works Director.

## SECTION 00120 - BIDDING REQUIREMENTS AND PROCEDURES

Comply with Section 00120 of the Standard Specifications modified as follows:

**00120.01 General Bidding Requirements** -

Add the following paragraph to the end of this subsection:

As and when applicable, the Contactor shall maintain the certifications required by Section 2, Chapter 325, Oregon Laws 2015 (Enrolled House Bill 2716), as amended by Section 26, Chapter 565, Oregon Laws 2015 (Enrolled House Bill 3303).

**00120.17 – Use of Agency-Owned Land for Staging or Storage Areas** – Add the following:

The Contractor shall not stage materials or equipment in front of private accesses.

## SECTION 00130 - AWARD AND EXECUTION OF CONTRACT

Comply with Section 00130 of the Standard Specifications modified as follows:

**00130.10 Award of Contract** - In the paragraph that begins "After the Bids are opened and a determination…" add the following bullet to the end of the bullet list:

• An unexpired certificate issued by the Oregon Department of Administrative Services (under Section 2, Chapter 454, Oregon Laws 2015 (Enrolled Senate Bill 491 )) upon completion of the curriculum and assessment that the Bidder understands the prohibitions set forth in ORS 652.220 and in other laws or rules that prohibit discrimination in compensation or wage payment. The certificate is only required if the Bidder employs 50 or more full-time workers and submitted a Bid for a procurement with an estimated contract price that exceeds $500,000.

## SECTION 00140 - SCOPE OF WORK

Comply with Section 00140 of the Standard Specifications.

## SECTION 00150 - CONTROL OF WORK

Comply with Section 00150 of the Standard Specifications modified as follows:

**00150.15(b) Agency Responsibilities** - Replace this subsection, except for the subsection number and title, with the following:

The Engineer will perform the Agency responsibilities described in the Construction Surveying Manual for Contractors, Chapter 1.5 (see Section 00305).

**00150.15(c) Contractor Responsibilities** - Replace this subsection, except for the subsection number and title, with the following:

The Contractor shall perform the Contactor responsibilities described in the Construction Surveying Manual for Contractors, Chapter 1.6 (see Section 00305) and the following:

Perform earthwork slope staking including intersections and matchlines and set stakes defining limits for clearing which approximate right-of-way and easements.

Perform final “as constructed” measurements, and provide to the Engineer a set of approved construction plans on which the as constructed measurements are written.

**00150.50(c) Contractor Responsibilities** - Replace this subsection, except for the subsection number and title, with the following:

The Contractor shall:

- Follow applicable rules adopted by the Oregon Utility Notification Center;
- Contact Utility owners during Bid preparation and after the Contract is awarded to verify all Utilities' involvement on the Project Site;
- Hold a Utility scheduling meeting and monthly Utility coordination meetings (see also 00180.42)
- Coordinate Project construction with the Utilities' planned adjustments, take all precautions necessary to prevent disruption of Utility service, and perform its Work in the manner that results in the least inconvenience to the Utility owners;
- Include all Utility adjustment work, whether to be performed by the Contractor or the Utilities, on the Contractor's Project Work schedule submitted under 00180.41;
- Protect from damage or disturbance any Utility that remains within the area in which Work is being performed. Maintain and re-establish location marks according to OAR 952-001-0090(2)(a). Coordinate re-establishment of the location marks with the associated Utility;
- Not disturb an existing Utility if it requires an unanticipated adjustment, but shall protect the Utility from damage or disturbance and promptly notify the Engineer;

- Determine the exact location before excavating within the reasonable accuracy zone according to OAR 952-001-0090(2)(c);
- Backfill any exposed Utilities as recommended and approved by the Utility representative. Obtain Utility locate warning tape from the Utility and replace damaged or removed warning tape. Utility locate warning tape may not be present at all existing Utilities;
- Stake, place warning tape, and maintain no work limits around critical Utility facilities as shown or directed by the Engineer and the Utility;
- In addition to the notification required in OAR 952-001-0090(5), notify the Engineer and the Utility as soon as the Contractor discovers any previously unknown Utility conflicts or issues. Contrary to the OAR, stop excavating until directed by the Engineer and allow the Utility a minimum of two weeks to relocate or resolve the previously unknown Utility issues; and
- Report to the Engineer any Utility owner who fails to cooperate or fails to follow the planned Utility adjustment.

Subject to the Engineer's approval, the Contractor may adjust the Utilities by asking the Utility owners to move, remove, or alter their facilities in ways other than as shown on the Plans or in the Special Provisions. The Contractor shall conduct all negotiations, make all arrangements, and assume all costs that arise from such changes.

While the Contractor is locating the existing utilities, the City of Molalla will provide up to one (1) hour of potholing service. All subsequent potholing will be provided to the Contractor at $240.00 per hour for actual time worked.

**00150.50(e) Notification** - Add the following paragraph to the end of this subsection:

This Project is located within the Oregon Utility Notification Center area which is a Utilities notification system for notifying owners of Utilities about Work being performed in the vicinity of their facilities. The Utilities notification system telephone number is 811 (or use the old number which is 1-800-332-2344).

Add the following subsection:

**00150.50(f) Utility Information:**

The following organizations may be adjusting Utilities within the limits of the Project during the period of the Contract with relocation Work estimated to be completed by the following dates (times):

The Contractor shall contact the Engineer to view the approved Utility Relocation Plan.

| Utility | Estimated Completion Date (Time) |
|---|---|
| 1. NW Natural<br>Christopher Flu<br>3123 Broadway Street NE<br>Salem, Oregon 97030<br>ctf@nwnatural.com<br>971-271-3721 | April 22, 2016 |

The Contractor shall notify, in writing, NW Natural, at least 2 Calendar Days before beginning Work on the Project.

The Contractor shall notify, in writing, at least 2 Calendar Days before beginning excavation, or other construction activities within 10 feet of the 2 inch and 4 inch (high pressure) diameter gas pipelines. NW Natural may require an On-Site safety watcher, at no cost to the Contractor.

When operating equipment directly above the gas pipeline, the Contractor shall keep equipment on the paved surfaces only.

In the immediate area of the high pressure gas lines, when moving any equipment, excavating, driving piles, pounding guardrail posts, boring, or other road construction activities, the Contractor shall increase the Reasonable Accuracy Zone from 24 inches, as defined in OAR 952-001-010, to 10 feet. Exceptions require written approval from NW Natural and may require an On-Site safety watcher, at no cost to the Contractor. The Contractor shall provide the Engineer a copy of the written approval of the exception before beginning work.

In the event of an emergency, the Contractor shall call (Avista Corporation 1-800-227-9187 OR Cascade Natural Gas Corporation 1-888-522-1130 OR Northwest Natural Gas 1-800-882-3377 OR Ruby Pipeline (LNG) 1-877-712-2288 OR Tesoro Logistics 1-800-725-1514 OR TransCanada GTN 1-800-447-8066 OR Williams Pipeline 1-801-584-6948) in addition to calls required by the Utilities notification system.

NW Natural has multiple valve boxes that may be within 15 feet of excavation or other construction activities. There are no anticipated conflicts with this facility. However, due to the close proximity of the construction activities, NW Natural will monitor, inspect, and protect.

2. Portland General Electric
   Richard Mullenburg
   4245 Kale Street NE
   Salem, OR 97305
   richard.mullenburg@pgn.com
   503-463-6173

Energized power lines overhang portions of the Work with a minimum vertical clearance of 18 feet. The Contractor shall maintain at least 10 feet of safety clearance. Exceptions require written approval from Portland General Electric, and may require an On-Site safety watcher, at no cost to the Contractor. The Contractor shall provide the Engineer a copy of the written approval of exception before beginning work.

Portland General Electric is in the process of reviewing the 100% plan set. The review is anticipated to be complete the second week of February. The Contractor shall be notified of the review outcome.

Energized power lines are located within the Project limits. The Contractor shall maintain at least 10 feet of safety clearance. Exceptions require written approval from Portland General Electric, and may require an On-Site safety watcher, at no cost to the Contractor. The Contractor shall provide Engineer with a copy of the written approval of exception before beginning work.

The Contractor shall notify, in writing, Portland General Electric, at least 2 Calendar Days before beginning Work on the Project.

3. Molalla Communications
   Mike Paulsen
   211 Robbins Street
   PO Box 360
   Molalla OR 97038
   mpaulsen@molalla.com
   503-829-1141

The Contractor shall notify, in writing, Molalla Communications, at least 2 Calendar Days before beginning excavation or other construction activities) within 10 feet of above- or below-ground communication facilities. The Contractor shall allow Molalla Communications 2 Calendar Days to complete relocation work.

4. Wave Broadband
   Robert Lee
   669 Ray J. Glatt Circle
   PO Box 568
   Molalla OR 97038
   rlee@wavebroadband.com
   971-338-3259

The Contractor shall notify, in writing, Wave Broadband, at least 2 Calendar Days before beginning excavation or other construction activities) within 10 feet of above- or below-ground communication facilities. The Contractor shall allow Wave Broadband 2 Calendar Days to complete relocation work.

The following contract work will be ongoing within the vicinity during the following times:

| **Contract Name** | **Estimated Times (From – To)** |
|---|---|
| Clackamas County Lola Avenue CDBG Project | Spring 2016 to Fall 2016 |

**00150.60(a) Load and Speed Restrictions for Construction Vehicles and Equipment** - Add the following bullet to the end of the bullet list:

- The Contractor shall restrict the combined weights of construction vehicles, Equipment, and Materials on Bridges according to 00220.45.

**00150.70 Detrimental Operations** - Replace the paragraph that begins "The Contractor shall avoid…" with the following paragraph:

The Contractor shall avoid operations whose methods, conditions, or timing may injure people or damage property or the Work. Damage may include without limitation, staining surfaces with mud or asphalt or damaging Utilities and foundations. (also see 00150.60, 00150.75, and Section 00170)

**00150.80 Removal of Unacceptable and Unauthorized Work** - Replace the paragraphs that begin "The Agency will not pay…" and "If, when ordered by…" with the following two paragraphs:

The Agency will not pay the Contractor for unacceptable Work, except as provided in 00150.25, or for unauthorized work. The Engineer may issue a written order for the correction or removal of such work at the Contractor's sole expense.

If, when ordered by the Engineer, the Contractor fails to correct or remove unacceptable Work or remove unauthorized work, the Engineer may have the correction, removal, or removal and replacement, done by others and deduct the entire cost from monies due or to become due the Contractor under the Contract.

## SECTION 00160 - SOURCE OF MATERIALS

Comply with Section 00160 of the Standard Specifications.

## SECTION 00165 - QUALITY OF MATERIALS

Comply with Section 00165 of the Standard Specifications modified as follows:

**00165.91 Fabrication Inspection Expense** - In the paragraph that begins "Fabrication of certain items…", replace the sentence that begins "Therefore, each time that…" with the following sentence:

Therefore, each time that inspection by or on behalf of the Agency is necessary, payment to the Contractor will be reduced by an amount computed at the following rates:

In the paragraph that begins "This Subsection applies to all...", replace the first sentence, but not the bullet list, with the following sentence:

This Subsection applies to all fabricated items or manufactured Materials that are inspected by or on behalf of the Agency, which include, but are not limited to:

## SECTION 00170 - LEGAL RELATIONS AND RESPONSIBILITIES

Comply with Section 00170 of the Standard Specifications modified as follows:

**00170.00 General** - Add the following two paragraphs after the paragraph that begins "In any litigation, the entire…":

The characterization of provisions of the Contract as material provisions or the failure to comply with certain provisions as a material breach of the Contract shall in no way be construed to mean that any other provisions of the Contract are not material or that failure to comply with any other provisions is not a material breach of the Contract.

All rights and remedies available to the Agency under applicable Laws are incorporated herein by reference and are cumulative with all rights and remedies under the Contract.

**00170.01(a) Federal Agencies** - Add the following to the list of Federal Agencies:

National Oceanic and Atmospheric Administration

**00170.02 Permits, Licenses and Taxes**

Add the following to the end of the bullet list:

Prior to the beginning of construction, the Contractor shall apply for and accept transfer of the project's 1200-C Permit issued by the Oregon Department of Environmental Quality (DEQ) into the Contractor's name, and comply with all of the permit requirements. The Contractor shall maintain the permit as required by the DEQ and terminate the permit as required upon project completion and final site stabilization.

**00170.65(a) General** - Add the following paragraph to the end of this subsection:

As required by ORS 279C.520, compliance by the Contractor with the prohibitions in ORS 652.220 is a material element of the Contract and failure to comply is a material breach that entitles the Agency to exercise any remedies available under the Contract, including but not limited to termination for default. The Contractor shall not prohibit any of the Contractor's employees from, or retaliate against an employee for, discussing the employee's rate of wage, salary, benefits or other compensation with another employee or another person.

**00170.70(a) Insurance Coverages** - Add the following to the end of this subsection:

The following insurance coverages and dollar amounts are required pursuant to this subsection:

| Insurance Coverages | Combined Single Limit per Occurrence | Annual Aggregate Limit |
|---|---|---|
| Commercial General Liability | $2,000,000 | $3,000,000 |
| Commercial Automobile Liability | $2,000,000 | (aggregate limit not required) |
| Pollution Liability | $2,000,000 | $3,000,000 |

**00170.70(c) Additional Insured** - Add the following paragraph and bullets to the end of this subsection:

Add the following as Additional Insureds under the Contract:

- The City of Molalla and its officers, agents, and employees
- Molalla City Council
- Murray, Smith & Associates, Inc.
- HDJ Design Group, PLLC

**00170.72 Indemnity/Hold Harmless** - Add the following paragraph and bullets to the end of this subsection:

Extend indemnity, defense and hold harmless to the Agency and the following:

- The City of Molalla and its officers, agents, and employees
- Molalla City Council
- Murray, Smith & Associates, Inc.
- HDJ Design Group, PLLC

## SECTION 00180 - PROSECUTION AND PROGRESS

Comply with Section 00180 of the Standard Specifications modified as follows:

**00180.21(d) Terms of Subcontracts** - Add the following paragraph to the end of this subsection:

As and when applicable, the Contractor shall require in its subcontracts that subcontractors maintain the certifications required by Section 2, Chapter 325, Oregon Laws 2015 (Enrolled House Bill 2716), as amended by Section 26, Chapter 565, Oregon Laws 2015 (Enrolled House Bill 3303).

Add the following subsection:

**00180.40(c) Specific Limitations** - Limitations of operations specified in these Special Provisions include, but are not limited to, the following:

| Limitations | Subsection |
|---|---|
| Contract Completion Time ..... | 00180.50(h) |
| Traffic Lane Restrictions ..... | 00220.40(e) |

The Contractor shall not perform work between July 1, 2016 and July 4, 2016, except for the following operations:

- Erosion control
- Traffic Control

The Contractor shall limit the days of operation to Monday through Friday.

The Contractor shall limit the hours of operation to 7:00 am through 6:00 pm.

The Contractor shall be aware of and subject to schedule limitations in the Standard Specifications that are not listed in this subsection.

**00180.41 Project Work Schedules** - After the paragraph that begins "One of the following Type…" add the following paragraph:

The Contractor shall provide to the Engineer, a 2-week “look ahead” schedule every Thursday by noon.
In addition to the "look ahead" Project Work schedule, a Type A schedule as detailed in the Standard Specifications is required on this Contract.

**00180.42 Preconstruction Conference** - Replace this subsection, except for the subsection number and title, with the following:

Unless otherwise approved in writing by the Engineer, before any Work is performed and within 30 Calendar Days of the Notice to Proceed, the Contractor shall meet with the Engineer for a preconstruction conference at a time mutually agreed upon.

Before beginning On-Site Work and before the preconstruction conference, the Contractor shall conduct a Utility scheduling meeting with representatives from the Utilities involved with this Project and with the Engineer. The Contractor shall incorporate the time needs of the Utilities into the Contractor's schedule submitted at the preconstruction conference.

The Contractor shall submit a written Utility Coordination Report to the Engineer not later than seven Calendar Days after the Utility scheduling meeting. The Utility Coordination Report shall:

- Identify each specific Utility;
- Identify Utility contact names and numbers;
- Identify dates for Utility scheduling for the entire Project;
- Contain documents showing that the Contractor has accomplished Utility locates; and
- Contain documents showing that Utility locates, along with applicable construction activities, have been reviewed and discussed on-site with Utility representatives.

Add the following subsection:

**00180.50(h) Contract Time** - The Contractor shall complete all Work to be done under the Contract by November 30, 2016.

**00180.85(b) Liquidated Damages** - Add the following to the end of this subsection:

The liquidated damages for failure to complete the Work on time required by 00180.50(h) will be $1,000.00 per Calendar Day *.

* Calendar Day amounts are applicable when the Contract time is expressed on the Calendar Day or fixed date basis.

## SECTION 00190 - MEASUREMENT OF PAY QUANTITIES

Comply with Section 00190 of the Standard Specifications.

## SECTION 00195 - PAYMENT

Comply with Section 00195 of the Standard Specifications modified as follows:

**00195.12(d) Steel Materials Pay Item Selection** - Add the following paragraph to the end of this subsection:

No Pay Items under this Contract qualify for the steel escalation/de-escalation program for this Project.

## SECTION 00196 - PAYMENT FOR EXTRA WORK

Comply with Section 00196 of the Standard Specifications.

## SECTION 00197 - PAYMENT FOR FORCE ACCOUNT WORK

Comply with Section 00197 of the Standard Specifications.

## SECTION 00199 - DISAGREEMENTS, PROTESTS, AND CLAIMS

Comply with Section 00199 of the Standard Specifications.

## SECTION 00210 - MOBILIZATION

Comply with Section 00210 of the Standard Specifications.

## SECTION 00225 - WORK ZONE TRAFFIC CONTROL

Comply with Section 00225 of the Standard Specifications modified as follows:

**00225.01(c) Standards** - Add the following bullet to the end of the bullet list:

- ODOT "Traffic Control Plans Design Manual", available on the ODOT Traffic Control Plans Unit website.

**00225.02 General Requirements** - In the paragraph that begins "Work may be suspended…", replace the sentence that begins "Costs for work performed…" with the following sentence:

Costs for work performed by the Agency may be deducted from monies due the Contractor.

**00225.10 General** - In the paragraph that begins "Evaluate the condition…", replace the first sentence with the following sentence:

Evaluate the condition of TCD using the criteria shown in the most current version in effect of the American Traffic Safety Services Association (ATSSA) publication titled "Quality Guidelines for Temporary Traffic Control Devices and Features", available from the ATSSA website at www.atssa.com.

**00225.11(c-1) Temporary Signs** - Replace the bullet that begins "Type 2 riprap geotextile…" with the following bullet:

- Geotextile fabric

**00225.41(b-4) Temporary Sign Supports** - Replace the bullet that begins "Do not tip over TSS…" with the following bullet:

- Do not tip over any TSS that is exposed to traffic, unless approved by the Engineer or the TSS is protected from traffic by a barrier system.

**00225.41(c) Sign Flag Boards and Sign Flags** - Replace this subsection, including subsections 00225.41(c-1) and 00225.41(c-2), with the following subsection:

**00225.41(c) Sign Flag Boards** - Install two sign flag boards, as shown or specified.

## SECTION 00280 - EROSION AND SEDIMENT CONTROL

Comply with Section 00280 of the Standard Specifications modified as follows:

Add the following sentence:

Comply with the conditions of the erosion control permit as issued by the Oregon Department of Environmental Quality (DEQ). Transfer permit according to 00170.02.

**00280.90 Payment** - Replace pay item (r) with the following pay item:

| | | |
|---|---|---|
| (r) | Inlet Protection, Type 3 | Each |

Add the following paragraph(s) after the paragraph that begins "Item (b) includes protecting…":

In item (r) the type will be inserted in the blank.

## SECTION 00290 - ENVIRONMENTAL PROTECTION

Comply with Section 00290 of the Standard Specifications.

**00290.30(b) Pollution Control Plan** - Replace the bullet that begins "Include the waste determination…" with the following bullet:

- Include the waste determination results from 00290.20(c-1). Provide reuse, recycle, and disposal options and the reasons for selecting those alternatives.

## SECTION 00295 - ASBESTOS MATERIALS

Section 00295, which is not a Standard Specification, is included in this Project by Special Provision.

### Description

**00295.00 Scope** - In addition to the requirements of Section 00290, remove asbestos according to these specifications.

Remove asbestos from the following locations:

| Location/Address | Material Description | Quantity (ft. or sq.ft.) | Percent Asbestos | Friable or Non-Friable |
|---|---|---|---|---|
| N. Molalla Ave. and Robbins Street | AC Waterline | 10-feet | >1% | Non-Friable |
| N. Molalla Ave. and Heintz Street | AC Waterline | 10-feet | >1% | Non-Friable |
| Other locations | AC Waterline | 5-feet | >1% | Non-Friable |
| | | | | |

**00295.03 Submittals** - The following forms and reports are required:

Completed and signed DEQ Notice for Removal of Non-Friable Asbestos to Agency and DEQ at least 5 Calendar Days before beginning non-friable asbestos removal.

Completed and signed DEQ Waste Shipment Report Form according to the following:

- Send the form along with the asbestos waste to the disposal facility.
- Provide a copy of the form to the Engineer within 48 hours of transportation of the asbestos waste.
- Obtain the final signed form from the disposal facility along with the disposal receipts and submit them the Engineer within three Calendar Days after receiving them from the waste disposal facility.
- See Appendix for DEQ forms ASN 4 and ASN 6.

## Labor

**00295.30 Personnel Qualifications** - Provide employees meeting the requirements of Appendix D of these Contract Documents.

## Construction

**00295.40 Asbestos Removal** - Comply with 29 CFR 1910, 29 CFR 1926.1101, 40 CFR 61, 40 CFR 763, OAR 340-248, ORS 468A and the following:

- Before beginning asbestos removal work, sign and submit all notifications and pay all fees to DEQ. Provide copies to the Engineer.
- Complete and sign all manifests and bill-of-lading forms for transporting and disposing the ACM.
- Maintain the ACM in an undamaged and non-friable condition by keeping the material wet during demolition or by using methods approved by DEQ.
- Keep material sealed during transport to the disposal facility. Transport and dispose of all ACM according to OAR 340-248-280 and OAR 340-248-290.
- Do not crush asbestos containing pipe and do not cut or break each pipe section into more than 3 pieces.
- Handle asbestos containing pipe according to the DEQ Publications "Asbestos Advisory for those who work with AC Water Pipe" and "How to Remove Asbestos (AC) Water Pipe – A Guide for Meeting DEQ Rules".
- Remove and dispose of the materials identified as having less than 1% asbestos according to 29 CFR 1926.1101, where that regulation refers to "asbestos" rather than "asbestos containing material" or "ACM".

## Measurement

**00295.80 Measurement** - The quantities of removing asbestos containing materials will be measured on the length basis .

## Payment

**00295.90 Payment** - The accepted quantities of removing asbestos containing materials will be paid for at the Contract unit price per foot or square foot, as appropriate, for the item "Remove Asbestos Material, _____ ".

The type of material will be inserted in the blank.

Payment will be payment in full for furnishing all equipment, labor, and incidentals necessary to complete the work as specified.

## SECTION 00305 - CONSTRUCTION SURVEY WORK

Section 00305, which is not a Standard Specification, is included for this Project by Special Provision.

### Description

**00305.00 Scope** - Provide construction survey work according to the current edition on the date of Advertisement, of the ODOT "Construction Surveying Manual for Contractors". This manual is available on the web at:

http://www.oregon.gov/ODOT/HWY/GEOMETRONICS/Pages/documents.aspx

### Measurement

**00305.80 Measurement** - No measurement of quantities will be made for construction survey work.

### Payment

**00305.90 Payment** - The accepted quantities of construction survey work will be paid for at the Contract lump sum amount for the item "Construction Survey Work".

Payment will be payment in full for furnishing all material, equipment, labor, and incidentals necessary to complete the work as specified.

No separate or additional payment will be made for any temporary protection and direction of traffic measures including flaggers and signing necessary for the performance of the construction survey work.

No separate or additional payment will be made for preparing surveying documents including but not limited to office time, preparing and checking survey notes, and all other related preparation work.

Costs incurred caused by survey errors will be at no additional cost to the City. Repair any damage to the Work caused by Contractor's survey errors at no additional cost to the City. The Engineer may make an equitable adjustment, which may decrease the Contract Amount, if the required survey work is not performed.

## SECTION 00310 - REMOVAL OF STRUCTURES AND OBSTRUCTIONS

Comply with Section 00310 of the Standard Specifications modified as follows:

**00310.41 Removal Work** - Add the following:

Sawcuts to existing sidewalks and curbs shall be made at existing joints.

## SECTION 00320 - CLEARING AND GRUBBING

Comply with Section 00320 of the Standard Specifications modified as follows:

**00320.40(b) Preserving and Trimming Vegetation** - Replace this subsection with the following subsection:

**00320.40(b) Preserving Vegetation and Other Natural Materials:**

**(1) Within the Work Areas** - Avoid injuring vegetation or other natural materials designated to be saved. Preservation of this vegetation includes protection and special care.

**(2) Outside the Work Areas** - Avoid injuring vegetation or other natural materials. Confine operations which may injure vegetation or other natural materials to the work area or to areas that have already been cleared.

**(3) Vegetation and Materials to be Saved** - The Owner will designate no work zones and identify and mark trees, existing landscaping, vegetation, or other natural materials to be saved, as shown. Provide and place work zone fencing, from section 00225.12 of the QPL, around designated no work zones and critical root zones of marked trees, as directed. Do not begin construction activity or move equipment into existing landscaped or vegetated areas until the work zone fencing is in place to designate and protect no work and critical root zones.

Do not work within the no work zones or critical root zone of marked trees unless written approval is obtained from the Engineer. Be responsible for all damage to and removal of trees, landscaping, vegetation or other natural materials designated to be saved. Damage will be determined by a specialist selected by the Engineer.

**(4) Salvaging Vegetation and Natural Materials** - As shown or directed, salvage and stockpile plants, rocks, down timber, and other natural materials for use in site restoration. Do not salvage material dominated by weedy species, as directed. If shown, salvage conifer trees that are greater than 18 inch diameter at breast height (DBH) with root wad intact. Store salvaged material in a clean and dry place until site restoration, or as directed.

Add the following subsection:

**00320.40(c) Tree and Vegetation Trimming** - Trim trees according to good tree surgery practices, as directed, and according to the following:

- Do not leave unsound branches of trees in place.
- Trim branches over roadways and bridges to provide at least 20 feet of clearance above the roadway surface.
- Trim branches over walks to provide at least 8 feet of clearance above the walk surface.
- Trim branches that obstruct sight distance at intersections or impair the visibility of signs.

Keep equipment and materials off of the critical root zone as directed.

Remove hazardous, dead, and damaged trees outside the clearing limit as directed.

**00320.42 Disposal of Matter** - Replace this subsection with the following subsection:

**00320.42 Ownership and Disposal of Matter** - Vegetation and natural material designated for preservation and salvage are the property of the Agency. All other matter and debris accumulated from clearing and grubbing operations become the Contractor's property at the place of origin. Dispose of all matter and debris according to 00290.20.

**00320.90 Payment** - Replace the paragraph that begins "No separate or additional payment…" with the following paragraph:

No separate or additional payment will be made for work zone fencing.

## SECTION 00330 - EARTHWORK

Comply with Section 00330 of the Standard Specifications modified as follows:

**00330.03 Basis of Performance** - Add the following paragraph to the end of this subsection:

Perform all earthwork under this Section on the excavation basis.

**00330.41(a-5) Waste Materials** - Replace this subsection, except for the subsection number and title, with the following:

Unless otherwise specifically allowed and subject to the requirements of 00280.03, dispose of materials, classed as waste materials in 00330.41(a-3), outside and beyond the limits of the Project and Agency controlled property according to 00290.20. Do not dispose of materials on wetlands, either public or private, or within 300 feet of rivers or streams.

**00330.92 Kinds of Incidental Earthwork** - Add the following bullet to the end of the bullet list:

Earthwork required for driveways and road approaches. Earthwork for driveways and road approaches will be that which is outside the neat line limits shown on the typical sections.

## SECTION 00344 - TREATED SUBGRADE

Comply with Section 00344 of the Standard Specifications modified as follows:

**00344.41 Addition of Stabilizing Material** - Add the following sentence to the end of this subsection:

Add six (6) percent Portland cement to the subgrade, calculated as a percentage of the in-place dry soil unit weight, unless otherwise directed.

**00345.45 Compaction** - Add the following to the end of this subsection:

(e) Use a static, sheepsfoot or segmented pad roller with a minimum static weight of 40,000 pounds for compaction of fine-grained soils (silts and clays), or an alternate approved by the Geotechnical Engineer. Use a smooth-drum roller with a minimum applied lineal force of 600 pounds per inch for final compaction of fine-grained soils (silts and clays), or an alternate approved by the Geotechnical Engineer. Use vibratory action only if disturbance of the treated material and/or underlying subgrade are not disturbed by vibration.

(f) During final compaction, the surface of the soil-cement shall be shaped to the required lines, grades, and cross-section. Compaction and finishing shall be performed in such a manner (less than 4 hours since applying the cement) as to produce a smooth, dense surface free of depressions from sheepsfoot/segmented pad compactors, cracks, ridges, or loose materials.

## SECTION 00350 - GEOSYNTHETIC INSTALLATION

Comply with Section 00350 of the Standard Specifications modified as follows:

**00350.10 Materials** - Add the following to the end of this subsection:

Provide manufacturer's certifications complying with 02320.10(c) for the following geosynthetics:

| **Geotextile** | **Certification Level A** |
|---|---|
| Subgrade | X |

## SECTION 00405 - TRENCH EXCAVATION, BEDDING, AND BACKFILL

Comply with Section 00405 of the Standard Specifications.

## SECTION 00415 - VIDEO PIPE INSPECTION

Comply with Section 00415 of the Standard Specifications.

## SECTION 00440 - COMMERCIAL GRADE CONCRETE

Comply with Section 00440 of the Standard Specifications modified as follows:

**00440.13 Field-Mixed Concrete** - Add the following paragraph to the end of this subsection:

Pre-packaged dry blended concrete meeting the requirements of 00440.12 may be used for work items listed in 00440.14(a).

**00440.14(a) General** - Add the following work item to the end of the list:

Hydrant Thrust Blocks……01160

## SECTION 00445 - SANITARY, STORM, CULVERT, SIPHON, AND IRRIGATION PIPE

Comply with Section 00445 of the Standard Specifications modified as follows.

Add the following subsection:

**00445.80(k) Reconnect/Re-Route Existing Services** – The quantities of storm and sewer service lateral reconnections/re-routing will be measured on the unit basis.

**00445.90 Payment** – Add the following pay items to the pay item list:

(m) Reconnect Existing Sewer Service Connection……..Each
(n) Reconnect/Re-Route Existing Storm Sewer Service Connection……Each

Item (m) includes reconnecting existing sewer laterals from existing storm sewer into existing sanitary sewer if laterals are determined to be improperly connected into existing storm sewer.

Item (n) includes reconnecting existing storm sewer laterals into the new storm sewer.

Item (m) and (n) include pipe, excavation, backfill, connection to sewer main, and connection to existing laterals.

## SECTION 00470 - MANHOLES, CATCH BASINS, AND INLETS

Comply with Section 00470 of the Standard Specifications modified as follows:

**00470.10 Materials** -

Replace the subsection reference for "Precast Concrete Manholes, Catch Basins and Inlets…" with "02450".

## SECTION 00490 - WORK ON EXISTING SEWERS AND STRUCTURES

Comply with Section 00490 of the Standard Specifications, modified as follows:

Add the following subsection:

**00490.12 Sanitary Sewer Spot Repair Pipe Material** - Pipe material for mainline spot repairs shall be as follows:

| Pipe Size | Material |
|---|---|
| 4-inches through 15-inches | Polyvinylchloride (PVC), ASTM D3034 SDR35 |

Add the following subsection:

**00490.50 Sanitary Sewer Spot Repair -** Locate, confirm and construct mainline spot repair as shown.

**(a) Video Inspection** - Conduct pre-construction inspection of the mainline pipe in accordance with Section 00415.

**(b) Repair Confirmation** – The Engineer will review the video inspection and confirm the extent of the mainline and lateral repairs, and/or authorize any additional repairs in writing. Unless otherwise shown, replace the lateral connection in accordance with the lateral connection details.

**(c) Excavation** – Conduct excavation in accordance with Section 00405. The existing pipe material shown does not guarantee the material, reinforcement, pipe class, or wall thickness.

Expose both ends of the mainline portion of the spot repair and confirm the existing pipe is competent (able to receive a flexible coupling) before laying any pipe. Adjust line, grade and the length of the spot repair accordingly. The spot repair must be in a straight line grade from the downstream end of the existing pipe to the upstream end. Check the pipes entering and exiting the spot repair with a hand level to ensure they are not at adverse grade. If there is adverse grade, remove additional pipe as needed to restore correct slope.

**(d) Installation** –Installation shall be in accordance with Section 00445.

If field cutting or machining the pipe is necessary, use only tools and methods recommended by the pipe manufacturer and approved by the Engineer. Where the field cuts are made confirm the existing pipe is competent.

Stabilize the subgrade by over-excavating a minimum of 12-inches and back fill with trench foundation stabilization material as directed by the Engineer. Extend the trench foundation stabilization material 6-inches on each side of the existing pipe.

Connect the existing pipe to the new pipe using flexible couplings with full-width stainless steel shear bands or flexible couplings with concrete closure collars so the new pipe and the existing pipe is set on a continuous slope with no sags.

Pipe bedding, pipe zone material, and subsequent backfill shall be in accordance with Section 00405. Use Class B Bedding for Rigid Sewer Pipe mainline spot repairs within Right-of-Way,

**(e) Restoration** – The length of paving restoration will be the actual length of the spot repair plus 2 feet beyond either side of the spot repair. Where spot repairs include laterals, pavement will extend 12-inches past the point of connection between the new and existing lateral pipes.

**00490.80 Measurement -** Add the following:

The quantities of spot repairs up to, but not exceeding 5 feet long will be measured on the unit basis. For spot repairs greater than 5 feet, each additional foot beyond 5 feet will be measure on the length basis.

**00490.90 Payment** – Add the following pay items:

(i) Sanitary Sewer Spot Repair __ to __ Inch, __ to __ Ft Deep, 5 Ft Long.....Each
(j) Sanitary Sewer Spot Repair __ to __ Inch, __ to __ Ft Deep, Each Additional Ft.....Foot

Add the following paragraphs:

For Items (i) and (j), insert the nominal diameters of the pipe size range in the first two blanks. Insert the depth range in the third and fourth blanks.

Items (i) and (j) include all sewer pipe, lateral and mainline repair flexible couplings with full-width stainless steel shear bands, tee and wye fittings including lateral pipe to the minimum extent shown in the lateral connection details, excavation, shoring, concrete closure collars, utility protection, backfill, bedding, trench foundation stabilization material, aggregate base and pavement restoration. Lateral pipe beyond the extents shown in the lateral connection details will be paid for in accordance with Section 00445. Depth for spot repairs shall be taken at the greatest depth along the length of the repair. Spot repairs up to, but not exceeding 5 feet in length shall be paid for using the appropriate bid item(s) for spot repairs 5 feet long, with a quantity of 1, based on pipe diameter and depth to invert. Spot repairs greater than 5 feet in length shall be paid for using the appropriate bid item(s) for spot repairs 5 feet long with each additional foot paid for by the associated incremental bid item, up to a maximum of 4 additional feet. Spot repairs having lengths that are multiples of 5 shall be paid for using the appropriate bid item(s) for spot repairs 5 feet long with the appropriate quantity of 5-foot lengths. Any other surface restoration including landscaping restoration shall be considered incidental.

Payment for video inspection will be in accordance with Section 0415

To the bulleted list under the lead line beginning "No separate or additional payment..." add the following items:

- Temporary lateral connections
- Surface materials which differ from that shown
- Correction or replacement of all work the Owner deems defective under 00490.72
- Repair of any damage to existing sewer facilities beyond the limits of confirmed spot repair.

Replace the paragraph that begins "Item (f) applies to manholes…" with the following paragraph:

Item (f) includes providing and installing the manholes and all work associated with installing the manholes over existing sewers.

## SECTION 00495 - TRENCH RESURFACING

Comply with Section 00495 of the Standard Specifications.

## SECTION 00641 - AGGREGATE SUBBASE, BASE, AND SHOULDERS

Comply with Section 00641 of the Standard Specifications.

## SECTION 00730 - EMULSIFIED ASPHALT TACK COAT

Comply with Section 00730 of the Standard Specifications modified as follows:

**00730.90 Payment** - Replace this subsection, except for the subsection number and title, with the following:

No separate or additional payment will be made for emulsified asphalt tack coat. Approximately 2.1 tons of emulsified asphalt in tack coat will be required on this Project.

## SECTION 00744 - ASPHALT CONCRETE PAVEMENT

Comply with Section 00744 of the Standard Specifications modified as follows:

**00744.11(a) Asphalt Cement** - Add the following to the end of this subsection:

Provide PG64-22 grade asphalt cement for this Project.

## SECTION 00759 - MISCELLANEOUS PORTLAND CEMENT CONCRETE STRUCTURES

Comply with Section 00759 of the Standard Specifications modified as follows:

**00759.00 Scope -** Add the following:

This work consists of furnishing, placing and finishing commercial grade concrete for the Bike Plaza.

**00759.02 Required Submittals** - Before the preplacement conference, submit the following:

**(a) Working Drawings** - Before the preplacement conference, submit six copies of unstamped working drawings according to 00150.35 for all sidewalk ramp work. Include field verification of each ramp location, and all dimensions and grades necessary to demonstrate compliance with the Standard Drawings and Plans. Notify the Engineer of any deficiencies or non-compliance with the Standard Drawings or Plans. The Engineer will provide additional or modified Plans as needed.

**(b) Sidewalk Ramp Plan** - At least 21 Calendar Days before the sidewalk ramp work is scheduled to begin, submit a plan for accomplishing all phases of the sidewalk ramp work, including the following:

- Surface preparation
- Compliance with working drawings and details submitted under 00759.02
- Compliance with current Standard Drawings and Plans
- Waste handling and disposal
- All other pertinent information

Do not begin any sidewalk ramp work before the plan for completing the work has been approved.

Material ordered or work done before the Engineer reviews and returns the documents will be at the Contractor's risk.

Add the following subsection:

**00759.03 Preplacement Conference** - Before beginning any sidewalk ramp work, meet with the Contractor's supervisory personnel and quality control manager, any sidewalk ramp subcontractors' supervisory personnel, and the Engineer at a mutually agreed upon time.

If the Contractor's personnel change, or if the Contractor proposes a significant revision to the plan for accomplishing the sidewalk ramp work, the Engineer may require additional preplacement conferences.

**00759.10 Materials -** Add the following materials:

**Stamped & Colored Concrete**

Stamped & Colored concrete to be installed per plan and manufacturer specifications. Stamped concrete pattern is Basket Weave Used Brick (FM-5200-S/O) and the color is to be LC-2240 Brick Red (integral color). Both stamp and color as available from Brickform. Products may be purchased from a local supplier of Brickform products.

**00759.46 Concrete** - Add the following sentence after the first sentence:

Before placing concrete, verify that forms are correctly positioned to produce sidewalk ramps with proper slopes and dimensions to comply with the Standard Drawings and Plans.

**00759.50(c) Driveways, Walks, and Surfacings** - Add the following paragraph to the end of this subsection:

In addition, finish concrete surfaces of sidewalk ramps to be within the established slopes and dimensions allowed by the Standard Drawings and Plans. Repair or remove and replace sidewalk ramps not meeting the Standard Drawings and Plans at no additional cost to the Agency.

**00759.80 Measurement** - Add the following sentence to the bullet that begins "Area Basis - Measurement…":

Measurement of concrete walks will include the total area of concrete walk, including the area of new concrete sidewalk ramps within the footprint of the concrete walk.

**00759.90 Payment** - Add the following pay items:

| | Pay Item | Unit of Measurement |
|---|---|---|
| (n) | Extra for New Sidewalk Ramps | Each |

Add the following paragraph after the paragraph that begins "In item (k)…":

Item (n) includes the additional work required to construct a new sidewalk ramp in a new concrete sidewalk or monolithic curb and sidewalk. Payment for the area of the new sidewalk ramp will be made under the concrete walk or sidewalk pay item.

Add the following:

Item (e) includes the Bike Plaza and Stamped Concrete.

The estimated area of stamped concrete on the project is 2,460 square feet. The estimated area of the bike plaza is 484 square feet.

Item (e) includes sidewalk ramps.

No separate or additional payment will be made for installation of weep holes. Installation of week holes will be considered incidental to Item (a) Concrete Curbs and Item (e) Concrete Walks.

## SECTION 00850 - COMMON PROVISIONS FOR PAVEMENT MARKINGS

Comply with Section 00850 of the Standard Specifications.

## SECTION 00860 - LONGITUDINAL PAVEMENT MARKINGS - PAINT

Comply with Section 00860 of the Standard Specifications modified as follows:

**00860.00 Scope** – Add the following to the end of this subsection:

Painted yellow curbing is included in this section.

**00860.45 Installation** - Replace this subsection, except for the subsection number and title, with the following:

Apply painted longitudinal pavement markings as follows:

- Apply one application at thickness of 15 mils wet, equivalent to 17 gallons per mile for a 4 inch wide solid stripe.
- Apply reflective elements at a minimum rate of 5 pounds per gallon of paint. Embed by means of wicking, a minimum of 80 percent of the reflective elements in the paint to a minimum depth of 50 percent of their diameter.

Minimum initial retroreflectivity shall be:

- White - 250 mcd/m2/lx
- Yellow - 200 mcd/m2/lx

## SECTION 00867 - TRANSVERSE PAVEMENT MARKINGS - LEGENDS AND BARS

Comply with Section 00867 of the Standard Specifications.

## SECTION 00905 - REMOVAL AND REINSTALLATION OF EXISTING SIGNS

Comply with Section 00905 of the Standard Specifications.

## SECTION 00910 - WOOD SIGN POSTS

Comply with Section 00910 of the Standard Specifications.

## SECTION 00920 - SIGN SUPPORT FOOTINGS

Comply with Section 00920 of the Standard Specifications modified as follows:

**00920.80 Measurement** - Add the following to the end of this subsection:

The estimated quantities of concrete for minor sign supports are:

| Support Type | Material | Quantity |
|---|---|---|
| Slip Base | Concrete | 0.1 cu. yd. |
| Anchor | Concrete | 2.4 cu. yd. |

## SECTION 00930 - METAL SIGN SUPPORTS

Comply with Section 00930 of the Standard Specifications modified as follows:

**00930.10 Materials** - Replace the paragraph that begins "Except for perforated steel square tube…" with the following paragraph:

Except for perforated steel square tube slip base sign supports and for perforated steel square tube anchor sign supports, galvanizing shall conform to the requirements of Section 02530. Galvanize perforated steel square tube slip base sign supports and perforated steel square tube anchor sign supports according to ASTM A653 G90, zinc coat corner seam weld after scarfing, apply a conversion coating, and apply a final clear polymer coating.

**00930.40(c) Welding** - Replace the paragraph that begins "AWS D1.1, Clause 3…" with the following bullets:

- AWS D1.1, Clause 3 prequalified welds for complete joint penetration (CJP) are not allowed.
- Qualify CJP welds according to AWS D1.1, Clause 4. Perform V-notch (CVN) testing at 70 °F meeting the requirements of the absorbed energy values of Table 4.14.

**00930.80 Measurement** - Add the following to the end of this subsection:

The estimated quantities of structural steel are as follows:

| Item | Estimated Quantity (Pound) |
|---|---|
| PSST Slip Base Sign Supports | 84 |
| PSST Anchor Sign Supports | 1281 |

## SECTION 00940 - SIGNS

Comply with Section 00940 of the Standard Specifications.

## SECTION 00960 - COMMON PROVISIONS FOR ELECTRICAL SYSTEMS

Comply with Section 00960 of the Standard Specifications modified as follows:

**00960.41(f) Disposition of Waste Materials** - Replace this subsection title with the title "**Disposal of Materials**".

**00960.44(b) Junction Box Locations** - In the sentence that begins "Mark the location of all…", replace "Type 1" with "Type 1, Type 1U, or Type 2".

## SECTION 00964 – MOLALLA AVENUE ILLUMINATION SYSTEM

Section 00964, which is not a Standard Specifications, is included in this Project by Special Provision.

### Description

**00964.00 Scope** – In addition to the requirements of Section 00960, install illumination according to the following Special Provision. The location of junction boxes and concrete pole foundations shown in the Plans is approximate. The exact locations will be established in the field. Work will consist of installing concrete pole foundations, conduit and junction boxes as shown in plans.

### Materials

**00964.10 Materials** – Furnish materials meeting the requirements of Section 00960 for conduit, junction boxes and concrete pole foundations.

### Construction

**00964.20 Construction** – All empty conduits shall be capped prior to completion of the illumination system.

Provide all excavation and backfilling work necessary to complete the work.

Restore all disturbed landscaping and underground systems to original condition upon completion of the electrical and illumination installation work at no additional cost to the Agency.

**(a) Excavation for Concrete Pole Foundations** – Make all excavations for pole stub with space to accommodate tamped backfill. Hand excavation may be required.

**(b) Disposal of Materials** – Dispose of materials accordion to Section 00920.20.

### Measurement

**00964.80 Measurement** – No measurement of quantities will be made for work performed under this Section.

The length of conduit and number of junction boxes and concrete pole foundations are shown on the Project Plans.

### Payment

**00964.90 Payment** – The accepted quantities of work performed under this Section will be paid for at the contract unit price, per unit of measurement, for the following item:

| Pay Item | Unit of Measurement |
|---|---|
| (a) Illumination System ..... | Lump Sum |

Item (a) includes all conduits, junction boxes, and concrete pole foundations required to construct the illumination system as specified.

Payment will be made in full for furnishing and placing all materials, and for furnishing all equipment, labor, and incidentals necessary to complete the work as specified.

No separate or additional payment will be made for excavation, backfill, replacement of disturbed earth, base and surfacing.

## SECTION 00967 - LANDSCAPE LIGHTING

Section 00967, which is not a Standard Specifications, is included in this Project by Special Provision.

### Description

**00967.00 Scope -** In addition to requirements of Section 00960, Section 00962 and Section 02926, install landscape illumination according to the following specifications and as detailed in the plans.

## Material

**00967.10 Materials** – Materials will be as shown in the plans.

## Construction

**00967.20 Construction** – The Contractor will operate the completed system continuously for 7 days. When the lighting system performance is satisfactory, the Contractor may be relieved of maintenance responsibilities.

## Measurement

**00967.80 Measurement** – No measurement of quantities will be made for work performed under this section.

## Payment

**00967.90 Payment** – Payment for "Landscape Lighting" will be by lump sum and will include all labor, materials, and equipment necessary or incidental to the installation and operation of the landscape lighting as detailed in the plans and these specifications including service cabinets and PGE connections.

## SECTION 01030 - SEEDING

Comply with Section 01030 of the Standard Specifications modified as follows:

**01030.13(f) Types of Seed Mixes** - Add the following to this subsection:

**Lawn Seeding** – The following seed mix is to be used for permanent turf replacement seeding:

| Botanical Name | Common Name | % by wt |
|---|---|---|
| Lolium perenne var Blazer 4 | Blazer 4 Perennial Ryegrass | 30% |
| Lolium perenne var Express II | Express II Perennial Ryegrass | 30% |
| Festuca rubra spp fallaz var Windward | Windward Chewings Fescue | 20% |
| Festuca rubra var Garnet | Garnet Creeping Red Fescue | 20% |

**01030.90 Payment** – Replace this subsection with the following:

No payment will be made for work under this section. Lawn Seeding will be considered incidental to section 01040.90.

## SECTION 01040 - PLANTING

Comply with Section 01040 of the Standard Specifications modified as follows:

**01040.12(a) Agency Supplied Materials** - Add the following subsection:

The City of Molalla will provide trees called for in Plans to the Contractor. All other materials needed for installation of trees and as shown in Plans shall be obtained by the Contractor.

The Contractor may pick up the trees at the following location:

City of Molalla Public Works

Contact Jennifer Cline at 503-759-0218 a minimum of 7 days prior to pickup for coordination.

**01040.23(f) Tree Grates** – Add the following to the end of the subsection:

Tree grates are to be model STA48 SQ (Part No. 80-2195) with Light Hole. Tree Grate Frames are to be 48" Square Style CI (Part NO. 82-2000) and obtained from Olympic Foundry Inc.

Contact:

Olympic Foundry Inc.
6530 NE 42nd Ave
Portland, OR 97218
(503) 281-3381
Sue Barmon (sue.b@olympicfoundry.com)
Lisa Nukala (lisa.n@olympicfoundry.com)

**01040.90 Payment** – Add the following subsection to the end of this section:

**(h) Landscaping** – Preparing of planting beds, supplying and installing topsoil, supplying and installing tree watering bags, and planting trees in accordance with the details in the Plans will be paid for at the unit Contract price, as lump sum, for the item "Landscaping".

Payment will be payment in full for furnishing and placing all materials, and for furnishing all equipment, labor, and incidentals necessary to complete the work as specified.

No separate or additional payment will be made for tree watering bags. Tree watering bags will follow the requirements in Section 01120 of the Specifications.

Add the following bullet items to the bulleted list:

- Trees
- Shrubs
- Relocation of the trash receptacle and sign as shown on sheet LP05
- Installation of the drinking fountain drain sump as shown on sheet LP05
- Lawn seeding

## SECTION 01070 - MAILBOX SUPPORTS

Comply with Section 01070 of the Standard Specifications.

## SECTION 01120 - IRRIGATION SYSTEMS

Comply with Section 01120 of the Standard Specifications modified as follows:

**01120.00 Scope** – Add the following:

This work includes repairing the existing irrigation system in the vicinity of the Bike Plaza.

Add the following subsection:

**01120.22 Tree Watering Bag** – Furnish pre-manufactured water holding and dispensing containers meeting the following conditions and requirements, and install as shown on the Plans and approved by the Landscape Architect.

- **a)** The bags shall be constructed of heavy duty polyethylene material (10 mil) consisting of a heavy duty nylon zipper which will permit the bag to be mounted and attached around a tree.
- **b)** The bags will contain 4 holes in or near the bottom through which water may be transmitted from the bag onto the ground surrounding the tree.
- **c)** The bag shall be UV treated and reinforced, and have a fill hole located near the top of the attached bag which will permit approximately 20 gallons of water to be stored and slowly dispensed from the bag through the drip holes.

**01120.40 General** – Add the following:

The Contractor shall prepare and submit to the Engineer, a plan to repair the existing irrigation system that will be disrupted as part of the Bike Plaza and associated landscape construction. The plan will include restoring irrigation to the new landscape areas well as the existing landscape and grass areas. The Engineer will approve the plan prior to repair of the system. The Contractor will implement the plan as approved by the Engineer.

Add the following subsection:

**01120.50 Tree Watering Bag** – Install tree watering bag per manufacturer's recommendations.

**01120.90 Payment –** Add the following:

The plan and repair of the existing irrigation system will be paid for at the Contract lump sum amount for the item "Repair Existing Irrigation System".

## SECTION 01140 - POTABLE WATER PIPE AND FITTINGS

Comply with Section 01140 of the Standard Specifications modified as follows:

**01140.10 Materials** - Replace this subsection, except for the subsection number and title, with the following:

Furnish materials meeting the following requirements:

Bolted, Sleeve-Type Couplings for Plain End Pipe..... 02475.60

Commercial Grade Concrete in Thrust Blocks ..... 00440
Detectable Marking Tape and Wire..... 02470.60
Ductile Iron Pipe Fittings..... 02475.20
Ductile Iron Pipe ..... 02470.20
Polyethylene Encasement ..... 02470.50
Polyvinyl Chloride (PVC) Pipe fittings - 4" and larger ..... 02475.40
Polyvinyl Chloride (PVC) Pipe fittings - under 4" ..... 02475.45
Polyvinyl Chloride (PVC) Pipe - 4" and larger ..... 02470.40
Polyvinyl Chloride (PVC) Pipe - under 4" ..... 02470.45
Reinforcement ..... 00530
Restrained Joints..... 02475.50
High Density Polyethylene Pipe ..... 02470.31
High Density Polyethylene Pipe Fittings..... 02475.31

High Density Polyethylene (HDPE) pipe shall meet the requirements of ANSI/AWWA C906, Standard PE Code Designation PE 3408, minimum cell classification PE 334434C (ASTM D 3350). Pipe may also be PE 4710 in accordance with the pending revisions to ANSI/AWWA C906-07. Pipe shall be iron pipe size (IPS) outside diameter or ductile iron pipe size (DIPS) outside diameter. All HDPE pipe and fittings shall be of the dimension ratio (DR) as shown on the plans.

**01140.11 Handling Pipe and Fittings** - Replace this entire subsection, including subsections .11(a) and .11(b), with the following subsection:

**01140.11 Handling Pipe and Fittings** - Handle pipe and fittings to prevent damage to or contamination of the pipe, fitting, lining, or coating. Load and unload pipe and fittings using hoists and slings so as to avoid shock or damage, and under no circumstances allow them to be dropped, skidded, or rolled against other pipe or fittings. If any part of the coating or lining is damaged, repair in a manner satisfactory to the Engineer. Damaged or contaminated pipe and fittings will be rejected. Immediately separate all damaged or contaminated pipe and fittings and remove from the project site.

If pipe requires temporary storage, store on cradles to prevent entry of dirt, other foreign material, or contamination. Keep the pipe or pipe joint free of dirt, other foreign material, or contamination during handling or laying operations. Remove, clean, and relay any pipe or fitting that has been installed with dirt, foreign material, or contamination in it. When pipe laying is not in progress, close the open ends of pipe with watertight plugs or by other approved means to ensure cleanliness.

**01140.12 Cutting Pipe** - Replace this entire subsection with the following subsection:

**01140.12 Cutting Pipe:**

**(a) General** - Whenever possible, use partial lengths of pipe supplied by the manufacturer to provide the proper spacing of valves, tees, or special fittings.

**(b) Cutting Operation** - Cut pipe with abrasive saws or with special pipe cutters. Square all pipe ends with the longitudinal axis of the pipe. Ream and smooth the interior edge and bevel the exterior edge of the cut ends. Flame cutting of ductile iron pipe will not be allowed.

**01140.40(c) Extra Trench Excavation** - Delete this subsection.

**01140.40(d) Grade and Alignment Changes** - Replace this subsection, except for the subsection number and title, with the following:

Excavate potholes to locate utilities. Allow enough time between excavating potholes and pipe installation to change alignment and grade of the pipeline to avoid conflicts. Obtain approval from the Engineer before using fittings to avoid conflicts.

**01140.40(e) Installation in Paved Areas** - Delete this subsection.

**01140.41(d) Steel Pipe** - Delete this subsection.

**01140.41(e) Polyvinyl Chloride Pipe** - Replace this entire subsection, including subsections .41(e-1) and .41(e-2), with the following subsection:

**01140.41(e) Polyvinyl Chloride (PVC) Pipe** - Install PVC pipe according to AWWA C605 and the manufacturer's recommendations.

Lay horizontal and vertical curves in pipe, as shown, with standard pipe by deflecting the joints. Use standard fittings and standard pipe lengths unless otherwise shown. If shorter lengths of pipe are required, the maximum allowable pipe lengths will be shown. Do not exceed 80 percent of the manufacturer's recommendations for the amount of deflection at each pipe joint when pipe is laid on a horizontal or vertical curve. Where field conditions require deflection or curves not shown, the Engineer will determine the methods to be used. Do not bend PVC pipe segments.

**01140.41(f) Water and Sanitary Sewer Separation** - Replace this subsection, except for the subsection number and title, with the following:

Comply with OAR 333-061-0050 governing horizontal and vertical separation between water and sanitary sewer facilities for installation of new water lines and appurtenances. Submit all proposals for variance in writing. The proposal shall include the reason for the variance, type of material and condition of the sewer line, and location of the water and sewer facilities, including horizontal and vertical skin-to-skin clearances. Proposals will be reviewed by the Engineer and approved, approved as noted, or returned for correction. Each variance will be addressed on a case-by-case basis.

Add the following subsection:

**01140.41(g) Other Utilities** - Maintain a minimum vertical clearance of 12 inches between installed pipe and other utilities. Maintain a minimum horizontal clearance of 24 inches between installed pipe and other utilities. Engineer's approval and additional protection is required for any pipe installation that does not maintain the specified minimum clearances.

**01140.42(a) General** - Replace the paragraph that begins "Mark pipe not…" with the following paragraph:

For pipe not furnished with a depth mark, mark pipe with a depth mark before joint assembly.

**01140.42(b) Steel Pipe under 6 Inches** - Delete this subsection.

**01140.45(a) Installation** - Replace the sentence that begins "Secure to the top of the pipe…" with the following sentence:

Use cable ties to secure the copper wire to the top of the pipe at a maximum spacing of 10 feet.

**01140.47 Connection to Existing Mains** - Replace this entire subsection with the following subsection:

**01140.47 Connection to Existing Mains** - Make necessary arrangements with the Engineer a minimum of 7 calendar days before making connections to existing water mains. Assemble all materials, equipment, and labor necessary to properly complete the work before starting.

**(a) Notification** - If the connection to the existing system involves temporary water system shutoff, provide written notices to the residents affected by the shutoff a minimum of 72 hours before the shutoff. Submit a draft written notification to the Engineer for approval 5 calendar days before providing written notice to the affected residents. The Engineer will advise which property owners are to be notified.

**(b) Permission** - The work to perform the connection may need to be carried out during times other than normal working hours. Do not operate any valves on the existing system without specific permission of the Engineer.

**(c) Connection Assemblies** - Excavate potholes to expose existing piping at connection points before constructing the connection. If existing piping is different than shown, provide measurements of depth and a detailed sketch of existing piping configuration and alignment to the Engineer not less than two weeks before the expected construction.

**(d) Uninterrupted Service** - Once work is started on a connection, proceed continuously without interruption, and as rapidly as possible until completed. Schedule main shutoffs to ensure that mains do not remain shut off overnight, on Fridays, over weekends, or on holidays.

**(e) Cutting Main Lines** - Cut existing water mains according to 01140.12. Remove the portions of pipe to provide for the installation of the required fittings at the points of connection. Determine the exact length of the existing water main that is to be removed. Bevel pipe ends to prevent damage to the transition coupling gasket during installation of the coupling. Clean the exterior of the existing pipe end to a sound, smooth finish before installing the coupling.

**01140.50(c) Disposal of Treated Water** - Replace this subsection, except for the subsection number and title, with the following:

Dispose of treated water flushed from mains. To protect aquatic life, de-chlorinate the waste water before disposing of water into any natural drainage channel. Dispose of disinfecting solution to the satisfaction of the Engineer and local authorities. If approved by the Engineer and the sanitary sewer Utility, disposal may be made to an available sanitary sewer, provided the rate of disposal will not overload the sewer.

**01140.52(b-1) Gaseous Chlorine** - Delete this subsection.

**01140.52(g) Chlorinating Connections to Existing Water Mains** - Replace this subsection, except for the subsection number and title, with the following:

Follow the chlorinating procedure specified in AWWA Standard C651. Liberally treat the exterior of the existing main at the connection point with hypochlorites. Swab or spray the interior of the pipe and all closure fittings with a 1 percent hypochlorite solution. Disinfect the 5 feet of existing main adjacent to the connection point with a 100 ppm chlorine solution and then thoroughly flush the line.

Add the following subsection:

**01140.60 Surface Restoration** - Restore trench surfaces according to Section 00495.

**01140.80 Measurement** - Replace this entire subsection with the following subsection:

**01140.80 Measurement** - The quantities of potable water pipe and fittings will be determined as follows:

(**a) Pipe, Fittings and Couplings** - The quantities of pipe of the various kinds, types, sizes and backfill classes will be measured on the length basis and will be horizontal measurement along the top of the finished trench, with no deduction for fittings, valves, and couplings.

Ductile iron pipe fittings will be measured by weight on the per pound basis. The unit of measurement used for payment will be the nominal weights listed in AWWA Standard C110 for the actual Class and type of fitting specified and shown on the plans. Fitting accessories including glands, bolts, and gaskets shall not be included in the fitting weight and shall be considered incidental in the fitting weights for payment.

**(b) Extra Trench Excavation** - The quantities of removal and backfill of extra trench excavation will be measured on the volume basis for each backfill class. The backfill classes are defined in Section 00405. When the pipeline grade is lowered in excess of 12 inches below the grade shown, or when pipeline horizontal alignment is changed by more than 12 inches after the original trench has been excavated, all additional excavation and backfill, outside the limits of the original trench, that is required to construct the change will be classified as extra trench excavation. The depth will be the actual depth removed for the changed line or grade as directed. The width will be the actual width removed for the changed line or grade, but in no case will the measured width exceed the allowable widths specified in 00405.41(c).

**(c) Blowoff Assemblies** - The quantities of blowoff assemblies will be measured on the unit basis.

**(d) Connections to Existing Mains** - The quantities of connections to existing mains will be measured on the unit basis.

Trench resurfacing will be measured according to 00495.80.

Installation under pavement by tunneling, jacking, or boring methods will be measured according to 00406.80.

**01140.90 Payment** -

Add the following pay items to the pay item list:

(f) _____ Inch C900 Water Pipe with Non Restrained

Joints and Class _____ Backfill ..... Foot
(g) _____ Inch C900 Water Pipe with Restrained
Joints and Class ___ Backfill ..... Foot
(h) Ductile Iron Pipe Fittings..... Pound

Add the following paragraph after the paragraph that begins "In item (e)…":

In items (f) and (g), the nominal diameter of pipe will be inserted in the first blank. The class of backfill will be inserted in the second blank.

Item (h) includes ductile iron fittings used for PVC pipe.

Delete the paragraph that begins "Valves will be paid…"

In the paragraph that begins "No separate or additional payment…", add the following bullets to the end of the bullet list:

- PVC fittings under 4 inch
- HDPE fittings

## SECTION 01150 - POTABLE WATER VALVES

Comply with Section 01150 of the Standard Specifications modified as follows:

**01150.40 General** - Replace this entire subsection with the following subsection:

**01150.40 General** - Install valves, back flow devices, and tapping sleeves according to the plans and the manufacturer's recommendations. Join to the pipe according to Section 01140 and AWWA Standards for the type of connecting ends furnished. Thoroughly clean and repair joints prior to installation.

**(a) Valve and Valve Box Installation** - Set valves, valve boxes, and valve box extensions perpendicular to the pipe. Install valve operator extensions when required. Center the valve box and valve box extension over the operating nut of the valve. Place valve box and valve box extension over the valve or valve operator so that the valve box extension does not transmit shock or stress to the valve. Install the valve box extension of the unit first, supported by backfill or by a closed-cell foam collar not less than 2 inches in thickness. Do not allow the valve box extension to rest directly on the body of the valve or on the water main.

**(b) Valve Operator Extensions** - Install a valve operator extension with rock guard on all valves that have the valve nut operator installed 3 feet or more below finish grade. Hot-dip galvanize extensions after fabrication.

**(c) Backfilling** - Backfill around valves according to Section 00405. Set the cast iron valve box cover flush with the roadbed or finished paved surface.

**01150.50 Field Testing** - Replace the sentence that begins "Correct all malfunctions…" with the following sentence:

Correct all deficiencies in the operation of the valves.

**01150.51 Hydrostatic Testing** - Replace the sentence that begins "Correct all defects…" with the following sentence:

Correct all defects to the satisfaction of the Engineer.

**01150.90 Payment** - Replace the paragraph that begins "No separate or additional payment…" with the following paragraph:

No separate or additional payment will be made for earthwork not covered under other pay items, jointing, blocking of valves, protective coatings, valve boxes, valve box extensions, valve operator extensions, or hydrostatic testing.

## SECTION 01160 - HYDRANTS AND APPURTENANCES

Replace Section 01160 of the Standard Specifications with the following Section 01160:

## SECTION 01160 - HYDRANTS AND APPURTENANCES

### Description

**01160.00 Scope** - This work consists of furnishing and installing fire hydrants and appurtenances in potable water systems at the locations shown or at other locations as directed.

### Materials

**01160.10 Materials** - Furnish materials meeting the following requirements:

Gate Valves ..... 02480.20
Commercial Grade Concrete in Thrust Blocking ..... 00440
End Connections..... 02485.20
Fire Hydrants ..... 02485.10
Bollards..... 00815
Hydrant Extensions..... 02485.40
Tie Rods ..... 02485.60
Traffic Flange..... 02485.50
Valve Boxes..... 02480.25
Valve Stem Extensions ..... 02480.26

**01160.11 Handling of Hydrants:**

**(a) Loading and Unloading** - Handle hydrants to prevent damage to the hydrant, lining or coating. Load and unload hydrants using hoists and slings so as to avoid shock or damage, and under no circumstances allow them to be dropped, skidded, or rolled against other hydrants. Damaged hydrants will be rejected. If damage is confined to the coating or lining, it may be repaired in a manner satisfactory to the Engineer. Immediately place all damaged

hydrants apart from the undamaged hydrants and remove the damaged hydrants from the Project Site.

**(b) End Caps** - Provide factory applied end caps on pipe connection ends. Maintain end caps through shipping, storage, and handling to prevent damage and prevent dirt and moisture from entering the hydrants.

## Construction

**01160.40 Setting Hydrants** - Inspect all hydrants upon delivery in the field to ensure proper working order. Install hydrants as shown or directed.

**(a) Touchup Painting** - After all installation and testing is complete, paint the exposed portion of the hydrant with one coat of the type and color of coating designated by the Engineer.

**(b) Out-of-Service Hydrants** - Identify all hydrants not in service by covering with a properly secured burlap or plastic bag.

**01160.41 Hydrant Laterals** - Install hydrant laterals, consisting of ductile iron pipe, from the auxiliary gate valve at the main to the hydrant, according to Section 01140 and as shown.

**01160.42 Hydrant Restraints** - Restrain the thrust created in the hydrant lateral as shown.

**01160.43 Gate Valves and Valve Boxes** - Install gate valves and valve boxes according to Section 01150, except that the end connections shall be provided with lugs for tie rods, or the bells shall provide sufficient clearance between the body of the valve and the hub to permit the installation of tie rods.

**01160.44 Hydrant Bollards** - Construct hydrant bollards according to Section 00815 at the locations shown. Paint the exposed portion of each hydrant bollard with one coat of the type and color of coating designated by the Engineer.

**01160.46 Moving Existing Hydrants** - Move existing hydrants where shown. As shown, remove the existing hydrant lateral tee from the main if the main is to remain active, and insert a new section of pipe into the water main in place of the existing hydrant lateral tee. Where the existing main to which the existing hydrant lateral tee is connected is to be abandoned or temporarily activated after the existing hydrant is moved, plug the open end of the hydrant lateral pipeline. Provide temporary thrust restraint if temporarily reactivated.

**01160.47 Reconnecting Existing Hydrants** - Reconnect existing hydrants where shown. Leave the location and elevation of the existing hydrant unchanged, but change the existing hydrant lateral to connect with a new gate valve and hydrant tee provided in a new main. Install new hydrant lateral according to Section 01140 where the lateral extends to connect to the new main. Where existing hydrants were not restrained, restrain the new connections as shown.

**01160.48 Hydrant Extensions** - Install hydrant extensions where required.

## Field Testing Installations

**01160.50 General** - After installation, operate hydrants from full open to full closed to ensure that they do not bind during operation. Correct all malfunctions in the operation of the hydrants.

**01160.51 Hydrostatic Testing** - Perform hydrostatic testing of hydrants according to 01140.51. Correct all defects in materials or workmanship to the satisfaction of the Engineer.

**01160.52 Disinfecting** - Disinfect hydrants according to 01140.52.

### Measurement

**01160.80 Measurement** - The quantities of work performed under this Section will be measured on the unit basis.

New pipe and tees for hydrant connections will be measured according to 01140.80. Gate valves will be measured according to 01150.80.

### Payment

**01160.90 Payment** - The accepted quantities of work performed under this Section will be paid for at the Contract unit price, per unit of measurement, for the following items:

| Pay Item | Unit of Measurement |
|---|---|
| (a) Hydrant Assemblies | Each |
| (d) Reconnecting Existing Hydrants | Each |

Item (a) includes thrust restraints, concrete blocks, gravel, and painting.

Item (b) includes thrust restraints, painting, and reconnecting to the main.
Payment will be payment in full for furnishing and placing all materials, and for furnishing all equipment, labor, and incidentals necessary to complete the work as specified.

New pipe and tees for hydrant connections will be paid for according to 01140.90. Gate valves will be paid for according to 01150.90.

## SECTION 01170 - POTABLE WATER SERVICE CONNECTIONS, 2 INCH AND SMALLER

Replace Section 01170 of the Standard Specifications with the following Section 01170.

## SECTION 01170 - POTABLE WATER SERVICE CONNECTIONS, 2 INCH AND SMALLER

### Description

**01170.00 Scope** - This work consists of furnishing and installing service connections, 2 inch in diameter and smaller, from the main to the water meter, and furnishing and installing sampling stations. The water meter will be furnished and installed by others unless specified otherwise in these Special Provisions or on the plans.

### Materials

**01170.10 Materials** - Furnish materials meeting the following requirements:

| | |
|---|---|
| Angle Meter Valve | 02490.60 |
| Bronze Nipples and Fittings | 02490.60 |
| Copper Tubing Service Pipe | 02490.40(a) |
| Corporation Stops | 02490.30 |
| Customer Service Valves | 02490.60 |
| Meter Boxes | 02490.70 |
| Meter Setters | 02490.50 |
| Polyethylene Tubing Service Pipe | 02490.40(b) |
| Saddles | 02490.20 |
| Sampling Stations | 02490.80 |
| Service Fittings | 02490.40(c) |

## Construction

**01170.40 General** - Except for class 52 or greater ductile iron pipe, make all service connections to water mains, using saddles as specified and of the size and type suitable for use with both the water main and the pipe being installed. For class 52 and greater ductile iron pipe, make direct taps for corporation stops according to the recommendations of the Ductile Iron Pipe Research Association (DIPRA), unless direct taps are prohibited by these Special Provisions. Install service pipe lines perpendicular to the main, unless otherwise shown.

**(a) Trench Depth** - Construct the depth of trench for service connection piping to provide a minimum of 30 inches of cover over the top of the pipe. Ensure that the main is not damaged during installation of the service. Excavate and backfill for service connections according to Section 00405, except install the service pipeline under existing pavement, curbs and sidewalks by boring methods approved by the agency having jurisdiction over the roadway. Resurface the trench according to Section 00495.

**(b) Installation** - Furnish and install water service assemblies at the locations shown, or as directed. Service pipe, meter assemblies, fittings, and appurtenances shall conform to the details and standards of the agency having jurisdiction. As shown, install the water service saddle, corporation stop, water service pipe, meter assembly, and meter, and reconnect the customer service pipe to the installed meter assembly.

Cut customer service pipes using tools specifically designed to leave a smooth, even, and square end on the pipe. Ream cut ends to the full inside diameter of the pipe. For pipes that will be connected using couplings that seal to the outside surface of the pipe, clean pipe ends to a sound, smooth finish before installing couplings.

Make service connections to water mains according to the recommendations of the pipe manufacturer and appropriate AWWA standard for water service installation. All water services shall be continuous without splices between the main and the meter unless otherwise approved by the agency having jurisdiction.

Install water service assemblies to match finished lines and grades, and maintain proper clearances and cover for the entire service connection. Adjust the meter box to the finished grade after the surface has been acceptably restored. When meter boxes are to be installed in driveways or a vehicular traveled way, use approved traffic rated meter boxes.

**01170.41 Reconnecting Existing Services** - Where shown, construct new service connections and angle valves to reconnect existing meter assemblies to the new mains. Verify the location of existing service connections and meter assemblies in the field. Notify affected customers of the service interruption at least 24 hours prior to service interruption. Use insulating couplings at all connections between existing galvanized steel or iron pipe and new copper pipe. All fittings, appurtenances, and other miscellaneous materials on the sections of existing pipe that have been removed become the property of the Contractor.

**01170.42 Sampling Stations** - Install sampling stations according to the manufacturer's recommendations and at the locations and depths shown or as directed. Install service connections and perform trenching, backfilling and surface restoration according to 01170.40.

## Field Testing Installations

**01170.50 Flushing and Disinfecting** - Before tapping the main for installation of service connections and sampling stations to existing water mains, liberally treat the exterior of the existing main with hypochlorites. Before making connections, swab or spray the ends of all service pipes, the connection points of all appurtenances, and the sampling stations with a 1 percent hypochlorite solution. Thoroughly flush the service connections and sampling stations. For installation of service connections and sampling stations concurrent with new water mains, flush and disinfect service connections and sampling stations according to Section 01140.

**01170.51 Hydrostatic Testing** - For installation of service connections and sampling stations that connect to existing water mains, apply system pressure to new installations prior to backfilling and repair any visible leaks. For installation of service connections and sampling stations concurrent with new water mains, perform hydrostatic testing of service connections and sampling stations according to Section 01140. Correct all defects in materials or workmanship and retest until satisfactory results are obtained.

## Measurement

**01170.80 Measurement** - The quantities of water service connection piping and water service line will be measured on the length basis.

The quantities of reconnecting existing services, sampling stations, water meter assemblies, and relocating meter assemblies will be measured on the unit basis.

## Payment

**01170.90 Payment** - The accepted quantities of work performed under this Section will be paid for at the Contract unit price, per unit of measurement, for the following items:

| Pay Item | Unit of Measurement |
|---|---|
| (a) _____ Inch Water Service Connection Piping | Foot |
| (b) _____ Inch Water Meter Assembly | Each |

In item (a), the nominal pipe diameter will be inserted in the blank.

In item (b), the nominal size of the meter will be inserted into the blank.

Item (a) includes excavating, tapping the main, laying and jointing the pipe and fittings, corporation stop, saddle, appurtenances, backfilling, surface restoration, testing, and flushing and disinfection of the water service.

Item (b) includes excavating, tapping the main, laying and jointing the pipe and fittings, appurtenances, backfilling, surface restoration, testing, and flushing and disinfection of the reconnected service connection.

Item (b) includes angle meter valve, meter box, meter setter, fittings, and appurtenances necessary to install the meter assembly, and abandoning the existing water service at the mainline. Existing water meters and customer service valves are to be re-used.

Payment will be payment in full for furnishing and placing all materials, and for furnishing all equipment, labor, and incidentals necessary to complete the work as specified.

## SECTION 02010 - PORTLAND CEMENT

Comply with Section 02010 of the Standard Specifications modified as follows:

**02010.20 Blended Hydraulic Cement** - Replace the paragraph that begins “Blended hydraulic cement…” with the following paragraph:

Blended hydraulic cement shall be either Type IS-Portland blast-furnace slag cement, Type IP-Portland-pozzolan cement, or Type IT-ternary blended cement according to AASHTO M 240, modified as follows:

Add the following paragraph to the end of this subsection:

Furnish blended hydraulic cement from the QPL.

## SECTION 02050 - CURING MATERIALS

Comply with Section 02050 of the Standard Specifications modified as follows:

**02050.00 Scope** - Replace this subsection, except for the subsection number and title, with the following:

This Section includes the requirements for liquid compounds, polyethylene films, and curing blankets used to cover concrete and other surfaces to retain moisture and to cure.

**02050.10 Liquid Compounds** - In the paragraph that begins "Furnish liquid membrane-forming…", replace "AASHTO C 309" with "ASTM C 309".

**02050.40 Liquid Evaporation Reducer Compounds** - Delete this subsection.

## SECTION 02055 - CONCRETE SURFACE RETARDERS

Section 02055, which is not a Standard Specification, is included in this Project by Special Provision.

### Description

**02055.00 Scope** - This Section includes the requirements for concrete surface retarders.

### Materials

**02055.10 Concrete Surface Retarders** - Furnish concrete surface retarders from the QPL.

## SECTION 02190 - PRESERVATIVE TREATMENT OF LUMBER

Comply with Section 02190 of the Standard Specifications modified as follows:

**02190.20 Drying Time** - Replace this subsection with the following subsection:

**02190.20 Drying After Treatment** - When using waterborne preservatives, as defined in AWPA P5, dry items according to AWPA T1, Section 7.

During the drying period and until the treated items are installed on the Project, separate each layer of treated items using spacers that are at least 1/2 inch thick.

The maximum moisture content shall be 19 percent prior to installation.

Collect all spacers and other treated wood waste from the construction site and dispose of them according to 00290.20.

## SECTION 02320 - GEOSYNTHETICS

Comply with Section 02320 of the Standard Specifications modified as follows:

**02320.10(c-1-a) Geotextiles** - Replace the bullet that begins "Minimum average roll values…" with the following bullet:

- Minimum average roll values for each of the specified properties from the same production run as the delivered material.

**02320.20 Geotextile Property Values** - Replace Table 02320-1 through Table 02320-6 with the following tables:

**Table 02320-1 Geotextile Property Values for Drainage Geotextile [1, 2]**

| Geotextile Property | ASTM Test Method | Units | Geotextile Property Requirements | | | |
|---|---|---|---|---|---|---|
| | | | Type 1 | | Type 2 | |
| | | | Woven | Nonwoven | Woven | Nonwoven |
| Grab Tensile Strength (minimum) Machine and Cross Machine Directions | D 4632 | lb | 180 | 115 | 250 | 160 |
| Grab Failure Strain (minimum) Machine and Cross Machine Directions | D 4632 | % | < 50 | ≥ 50 | < 50 | ≥ 50 |
| Tear Strength (minimum) | D 4533 | lb | 67 | 40 | 90 | 56 |
| Puncture Strength (minimum) | D 6241 | lb | 370 | 220 | 495 | 310 |
| Apparent Opening Size (AOS) (maximum) U.S. Standard Sieve | D 4751 | — | 40 | 40 | 40 | 40 |
| Permittivity (minimum) | D 4491 | $sec^{-1}$ | 0.5 | 0.5 | 0.5 | 0.5 |
| Ultraviolet Stability Retained Strength (minimum) | D 4355 (at 500 hours) | % | 50 | 50 | 50 | 50 |

[1] All geotextile properties are Minimum Average Roll Values (MARV). The test results for any sampled roll in a lot shall meet or exceed the values shown in the table.

[2] Woven slit film geotextiles (geotextiles that are made from yarns of a flat, tape-like character) are not acceptable.

**Table 02320-2 Geotextile Property Values for Riprap Geotextile [1, 2]**

| Geotextile Property | ASTM Test Method | Units | Geotextile Property Requirements | | | |
|---|---|---|---|---|---|---|
| | | | Type 1 | | Type 2 | |
| | | | Woven | Nonwoven | Woven | Nonwoven |
| Grab Tensile Strength (minimum) Machine and Cross Machine Directions | D 4632 | lb | 250 | 160 | 315 | 200 |
| Grab Failure Strain (minimum) Machine and Cross Machine Directions | D 4632 | % | < 50 | ≥ 50 | < 50 | ≥ 50 |
| Tear Strength (minimum) | D 4533 | lb | 90 | 56 | 110 | 80 |
| Puncture Strength (minimum) | D 6241 | lb | 495 | 310 | 620 | 430 |
| Apparent Opening Size (AOS) (maximum) U.S. Standard Sieve | D 4751 | — | 40 | 40 | 40 | 40 |
| Permittivity (minimum) | D 4491 | $sec^{-1}$ | 0.5 | 0.5 | 0.5 | 0.5 |
| Ultraviolet Stability Retained Strength (minimum) | D 4355 (at 500 hours) | % | 70 | 70 | 70 | 70 |

[1] All geotextile properties are Minimum Average Roll Values (MARV). The test results for any sampled roll in a lot shall meet or exceed the values shown in the table.

[2] Woven slit film geotextiles (geotextiles that are made from yarns of a flat, tape-like character) are not acceptable.

**Table 02320-3 Geotextile Property Values for Sediment Fence** [1]

| Geotextile Property | ASTM Test Method | Units | Geotextile Property Requirements | | |
|---|---|---|---|---|---|
| | | | Supported | Unsupported | |
| | | | — | Elongation [2] ≥ 50% | Elongation [2] ≤ 50% |
| Grab Tensile Strength (minimum) Machine and Cross Machine Directions | D 4632 | lb | 90<br>90 | 120<br>100 | 120<br>100 |
| Apparent Opening Size (AOS) (maximum) U.S. Standard Sieve | D 4751 | — | 30 | 30 | 30 |
| Permittivity (minimum) | D 4491 | $sec^{-1}$ | 0.05 | 0.05 | 0.05 |
| Ultraviolet Stability Retained Strength (minimum) | D 4355 (at 500 hours) | % | 70 | 70 | 70 |

[1] All geotextile properties are Minimum Average Roll Values (MARV). The test results for any sampled roll in a lot shall meet or exceed the values shown in the table.

[2] Measured according to ASTM D 4632.

**Table 02320-4 Geotextile Property Values for Subgrade Geotextile (Separation)** [1]

| Geotextile Property | ASTM Test Method | Units | Geotextile Property Requirements | |
|---|---|---|---|---|
| | | | Woven | Nonwoven |
| Grab Tensile Strength (minimum) Machine and Cross Machine Directions | D 4632 | lb | 180 | 113 |
| Grab Failure Strain (minimum) Machine and Cross Machine Directions | D 4632 | % | < 50 | ≥ 50 |
| Tear Strength (minimum) | D 4533 | lb | 68 | 41 |
| Puncture Strength (minimum) | D 6241 | lb | 371 | 223 |
| Apparent Opening Size (AOS) (maximum) U.S. Standard Sieve | D 4751 | — | 30 | 30 |
| Permittivity (minimum) | D 4491 | $sec^{-1}$ | 0.05 | 0.05 |
| Ultraviolet Stability Retained Strength (minimum) | D 4355 (at 500 hours) | % | 50 | 50 |

[1] All geotextile properties are Minimum Average Roll Values (MARV). The test results for any sampled roll in a lot shall meet or exceed the values shown in the table.

**Table 02320-5 Geotextile Property Values for Embankment Geotextile** [1]

| Geotextile Property | ASTM Test Method | Units | Geotextile Property Requirements | |
|---|---|---|---|---|
| | | | Woven | Nonwoven |
| Grab Tensile Strength (minimum) Machine and Cross Machine Directions | D 4632 | lb | 315 | 200 |
| Grab Failure Strain (minimum) Machine and Cross Machine Directions | D 4632 | % | < 50 | ≥ 50 |
| Tear Strength (minimum) | D 4533 | lb | 110 | 80 |
| Puncture Strength (minimum) | D 6241 | lb | 620 | 430 |
| Apparent Opening Size (AOS) (maximum) U.S. Standard Sieve | D 4751 | — | 30 | 30 |
| Permittivity (minimum) | D 4491 | $sec^{-1}$ | 0.02 | 0.02 |
| Ultraviolet Stability Retained Strength (minimum) | D 4355 (at 500 hours) | % | 50 | 50 |

[1] All geotextile properties are Minimum Average Roll Values (MARV). The test results for any sampled roll in a lot shall meet or exceed the values shown in the table.

**Table 02320-6 Geotextile Property Values for Pavement Overlay Geotextile** [1]

| Geotextile Property | ASTM Test Method | Units | Geotextile Property Requirements |
|---|---|---|---|
| | | | Nonwoven |
| Grab Tensile Strength (minimum) Machine and Cross Machine Directions | D 4632 | lb | 100 |
| Grab Failure Strain (minimum) Machine and Cross Machine Directions | D 4632 | % | ≥ 50 |
| Asphalt Retention (minimum) | D 6140 | oz./sq.ft. | 2.8 |
| Melting Point (minimum) | D 276 | °F | 300 |

[1] All geotextile properties are Minimum Average Roll Values (MARV). The test results for any sampled roll in a lot shall meet or exceed the values shown in the table.

## SECTION 02450 - MANHOLES AND INLET MATERIALS

Comply with Section 02450 of the Standard Specifications modified as follows:

Add the following Subsection:

**02450.15 Precast Concrete Catch Basins and Inlets** - Furnish precast concrete catch basins and inlet conforming to the requirements of ASTM C 913.

## SECTION 02470 - POTABLE WATER PIPE MATERIALS

Comply with Section 02470 of the Standard Specifications modified as follows:

**02470.10 General** - Replace the sentence that begins " All materials in contact…" with the following sentence:

All materials in contact with potable water shall conform to ANSI/NSF Standard 61, Drinking Water System Components - Health Effects or equivalent, and ANSI/NSF Standard 372, Drinking Water System Components - Lead Content.

**02470.30 Steel Pipe 6 Inches and Larger** - Delete this subsection.

**02470.35 Steel Pipe Under 6 Inches** - Delete this subsection.

**02470.60(b) Detectable Marking Wire** - Replace this subsection, except for the subsection number and title, with the following:

Furnish detectable marking wire with blue colored insulation and according to 00445.11. Furnish splice kits according to 00445.48.

**02470.70 Acceptance** - Replace this subsection, except for the subsection number and title, with the following:

Ductile iron, HDPE, and PVC pipe will be accepted according to 00165.35 and this Section.

## SECTION 02475 - POTABLE WATER FITTING MATERIALS

Comply with Section 02475 of the Standard Specifications modified as follows:

**02475.00 Scope** - Replace this subsection, except for the subsection number and title, with the following:

This Section includes the requirements for fittings, restrained joints, and couplings for ductile iron pipe, high density polyethylene (HDPE) pipe, and polyvinyl chloride (PVC) pipe for potable water systems.

**02475.10 General** - Replace the paragraph that begins "All materials in contact…" with the following paragraph:

All materials in contact with potable water shall conform to ANSI/NSF Standard 61, Drinking Water System Components - Health Effects or equivalent, and ANSI/NSF Standard 372, Drinking Water System Components - Lead Content.

**02475.20 Ductile Iron Pipe Fittings** - Replace the sentence that begins "Gaskets for flat faced or raised…" with the following two sentences:

Provide gaskets for ductile iron flanged joints that are composed of synthetic rubber, full faced, 1/8 inch thick, and conform to ANSI/AWWA C111/A21.1. Ring gaskets will be permitted only where specified or shown.

**02475.30 Fittings for Steel Pipe 6 Inches and Larger** - Delete this subsection.

**02475.35 Fittings for Steel Pipe Under 6 Inches** - Delete this subsection.

**02475.50 Restrained Joints** - Replace the sentence that begins "Design the restraint system…" with the following sentence:

Design the restraint system to operate at a working pressure that is greater than the hydrostatic test pressure identified in 01140.51(a), unless otherwise shown.

**02475.60 Bolted, Sleeve-Type Couplings for Plain-End Pipe** - Replace this subsection, except for the subsection number and title, with the following:

Bolted, sleeve type couplings, reducing or transition couplings, and flanged coupling adapters used to join plain end pipe shall meet the requirements of AWWA C219. Buried couplings used for connecting ductile iron, gray cast iron, or PVC pipe shall be ductile iron.

## SECTION 02480 - POTABLE WATER VALVE MATERIALS

Comply with Section 02480 of the Standard Specifications modified as follows:

**02480.00 Scope** - Replace this subsection, except for the subsection number and title, with the following:

This Section includes the requirements for gate valves, butterfly valves, valve boxes, valve stem extensions, tapping sleeve and valve assemblies, check valves, combination air release/air vacuum valves, and backflow prevention devices for potable water systems.

**02480.10 General** - Replace this subsection, except for the subsection number and title, with the following:

Provide valves with operating nuts or hand wheels as specified or shown. Furnish a standard 2 inch operating nut. All materials in contact with potable water shall conform to ANSI/NSF Standard 61, Drinking Water System Components - Health Effects, or equivalent. When indicated, coat all interior and exterior ferrous surfaces of valves with a protective epoxy coating meeting the requirements of AWWA C550.

**02480.20(a) Minimum Pressure** - Replace the sentence that begins "Gate valves shall meet…" with the following sentence:

Provide gate valves that meet the requirements of AWWA C500, AWWA C509, or AWWA C515.

Add the following subsection:

**02480.20(c) Valves** - Provide gate valves that are resilient seat, non-rising stem type, open counterclockwise, and are equipped with an O-ring stuffing box.

**02480.23 Ball Valves** - Delete this entire subsection, including subsections .23(a) and .23(b).

**02480.24 Power Actuating Devices** - Delete this subsection.

**02480.25 Valve Boxes** - Replace this subsection, except for the subsection number and title, with the following:

Install valve boxes on all buried valves. Boxes shall be of cast iron, two-piece, slip type standard design, with a base corresponding to the size of the valve. The cover shall have the word "WATER" cast in it.

**02480.26 Valve Stem Extensions** - Replace this subsection, except for the subsection number and title, with the following:

Valve stem extensions shall have a 2 inch square operating nut and self-centering rock plate support. Valves with an operating nut more than 3 feet below grade shall have a valve stem extension to raise the operating nut to within 3 feet of the ground surface.

**02480.30(a) Valve Assemblies** - Replace the sentence that begins "The outlet ends shall conform…" with the following sentence:

The outlet ends shall conform in dimensions to the AWWA Standards for mechanical joint connections or flange connections, except that the outside of the end connection shall have a large flange for attaching a drilling machine.

**02480.40(c) Hydraulic Cushion Check Valves** - Delete this subsection.

**02480.50 Hydraulically Operated Valves** - Delete this subsection.

**02480.60 Combination Air Release/Air Vacuum Valves** - Replace this entire subsection, including subsections .60(a) and .60(b), with the following subsection:

**02480.60 Combination Air Release/Air Vacuum Valves** - Furnish combination air release/air vacuum valves that meet the requirements of AWWA C512. The valve body shall have a minimum design working pressure of 300 psi. The body and cover shall be cast iron conforming to ASTM A 48, Class 30. Floats shall be stainless steel conforming to ASTM A 240 and designed to withstand 1,000 psi. Seats shall be Buna-N rubber. Internal parts shall be stainless steel or bronze.

## SECTION 02485 - HYDRANT AND APPURTENANCE MATERIALS

Comply with Section 02485 of the Standard Specifications modified as follows:

**02485.00 Scope** - Replace this subsection, except for the subsection number and title, with the following:

This Section includes the requirements for hydrants, hydrant appurtenances, and bollards for potable water systems.

**02485.10 Fire Hydrants** - Replace the paragraph that begins "Fire hydrants shall be…" with the following paragraph:

Furnish Mueller Super Centurion 250 fire hydrants color yellow conforming to AWWA C502.

**02485.30(a) Hydrant Dimensions** - Replace this subsection, except for the subsection number and title, with the following:

Barrels shall have a 7 inch minimum inside diameter. Hydrant length, measured from the bottom of the hydrant to the sidewalk ring, shall provide proper cover at each installed location. Valve openings shall have a minimum diameter of 5 1/4 inches.

## SECTION 02490 - POTABLE WATER SERVICE CONNECTION MATERIALS, 2 INCH AND SMALLER

Comply with Section 02490 of the Standard Specifications modified as follows:

**02490.40(b) Polyethylene Tubing Service Pipe** – Revise this subsection with the following:

Polyethylene tubing service pipe shall be cross-linked polyethylene (PEX) meeting the requirements of AWWA C904, ASTM F876, F877, F2023, CSA B137.5, NSF 14 and NSF 61 Standards. The minimum pressure rating shall be 160 psi at 73 degrees Fahrenheit.

**02490.40(c) Service Fittings** – Add the following sentences to the end of this subsection:

Stainless steel liners shall be used with all compression couplings. Ball valves shall be Mueller B-224258RN with 1/4 turn. Miscellaneous adapters required to transition to other pipe materials shall be incidental to the cost.

**02490.70(a) Nontraffic Areas –** Replace this subsection with the following:

**(a)** Meter boxes shall be Brooks #37 for 1-inch services, and lid and cover shall be No. 37-S.

**02490.70(a) Traffic Areas –** Replace this subsection with the following:

**(b)** Meter boxes shall be Brooks #37 for 1-inch services, and lid and cover shall be No. 37-T.

## SECTION 02560 - FASTENERS

Comply with Section 02560 of the Standard Specifications modified as follows:

**02560.30 Tie Rods and Anchor Bolts** - Replace this subsection with the following subsection:

**02560.30 Tie Rods, Anchor Bolts, and Anchor Rods:**

**(a) Steel Tie Rods, Anchor Bolts, and Anchor Rods** - Steel tie rods, anchor bolts, and anchor rods shall conform to: AASHTO M 314, Grade 36 or 55; ASTM F 1554, Grade 36 or 55.

**(b) High-Strength Tie Rods, High-Strength Anchor Bolts, and High-Strength Anchor Rods** - High-strength tie rods, high-strength anchor bolts, and high-strength anchor rods shall conform to: AASHTO M 314, Grade 105; ASTM F 1554, Grade 105; or ASTM A 449, Type 1.

**(c) Nuts** - Nuts for tie rods, anchor bolts, and anchor rods shall conform to the requirements of the following, or equivalent:

**Plain Steel Tie Rods, Anchor Bolts, and Anchor Rods:**

All - Heavy Hex AASHTO M 291 (ASTM A 563), Grade A

**Galvanized Steel Tie Rods, Anchor Bolts, and Anchor Rods:**

All - Heavy Hex AASHTO M 291 (ASTM A 563), Grade A, C, D, or DH

**Plain Or Galvanized High-Strength Tie Rods, High-Strength Anchor Bolts, and High-Strength Anchor Rods:**

All - Heavy Hex AASHTO M 291 (ASTM A 563), Grade DH

**(d) Washers** - Washers for anchor bolts shall conform to ASTM F 436, Type 1.

**02560.40 Galvanizing and Coating of Fasteners, Tie Rods, and Anchor Bolts** - Replace this subsection title with the title "**Galvanizing and Coating:**"

**02560.40(a) Galvanizing of Fasteners, Tie Rods, and Anchor Bolts** - Replace this subsection with the following subsection:

**02560.40(a) Galvanizing of Fasteners, Tie Rods, Anchor Bolts, and Anchor Rods** - Hot-dip galvanize fasteners, tie rods, anchor bolts, anchor rods, nuts, and washers according to AASHTO M 111 (ASTM A 123) or AASHTO M 232 (ASTM A 153) as appropriate to the product.

When specified, mechanically galvanize fasteners according to ASTM B 695, Class 50, Type 1.

Match galvanized bolts, tie rods, anchor bolts, and anchor rods with appropriate galvanized nuts for assembly. Ship nuts in the same container consisting of bolts, tie rods, anchor bolts, or anchor rods.

Overtap nuts for galvanized fasteners, galvanized tie rods, galvanized anchor bolts, and galvanized anchor rods according to AASHTO M 291 (ASTM A 563).

Measure the zinc thickness on the wrench flats or top of bolt head of galvanized bolts and on the wrench flats of galvanized nuts.

**02560.60(a) Rotational Capacity Test** - In the paragraph that begins "Test all high-strength fasteners…", replace the first sentence with the following sentence**:**

Test all high-strength fasteners, except high-strength tie rods, high-strength anchor bolts, and high-strength anchor rods, according to Method 1 or 2 below, as applicable.

**02560.60(b) Other Test Requirements** - Replace the two paragraphs that begin "Provide three extra high strength bolt assemblies…" and "Provide three extra high strength tie rod and…" with the following two paragraphs:

Provide three high-strength bolt assemblies per size per lot for check testing.

Provide one high-strength tie rod assembly, one high-strength anchor bolt assembly, and one high-strength anchor rod assembly per size per lot for check testing.

## SECTION 02910 - SIGN MATERIALS

Comply with Section 02910 of the Standard Specifications modified as follows:

**02910.33(d) Nonreflective Black Screened Legend** - Replace this subsection, except for the subsection number and title, with the following:

Furnish material for nonreflective black screened legends that is compatible with the sign sheeting, as recommended by the sign sheeting manufacturer.

# APPENDICES

# APPENDICES

# APPENDIX A

## Instructions for Form ANS 4

# APPENDIX A

## Instructions for Form ASN 4

# Instructions for form ASN 4

## Waste Shipment Record Form

This form is used as a permanent record for tracing asbestos waste materials from removal site to final disposal. DEQ regulation OAR 340-248-0280 and -0290 applies to asbestos waste disposal.

### Waste Generator Section

1. Name and address of site where asbestos waste was generated. Enter name and phone number of contact person for the contractor, facility, or operator of the asbestos waste generation site.
2. Name, phone number and address of person performing asbestos abatement.
3. Name, phone number and address of disposal site where waste is taken.
4. Describe materials being removed (i.e. pipe insulation, flooring, roofing, popcorn ceiling, HVAC system insulation, or nonfriable asbestos).
5. List total number of containers and their type. Enter one of the following container codes used in transporting each type of asbestos material. (Specify other type of container used if not listed below):

   **DM:** Metal drums, barrels
   **DP:** Plastic drums, barrels
   **BA:** 6 mil. Plastic bags or wrapping
   **NFC:** Leak-tight containerization for nonfriable asbestos waste.

6. Estimate total cubic yards of material.
7. Print name of company and authorized signer. This section of the form must be signed and dated.

**NOTE:** Waste Generator must retain copy of completed disposal form.

### Waste Transporter Section

8. Transporter #1: Acknowledgment of receipt of asbestos waste material. Print agent and company name, then sign and date.
9. Transporter #2: Acknowledgment of receipt of asbestos waste materials. Print agent and company name, then sign and date.

**NOTE:** if there are more than two transporters attach a new waste shipment form.

### Disposal Site Section

10. Print name and title then sign and date. This certifies you have received the asbestos material covered by this manifest.
11. Discrepancy space. To be used if there is a discrepancy between the amount of material received by landfill and amount of material listed on waste shipment form.

**NOTE:** Waste disposal site operator must retain a copy of this form.

In addition, asbestos waste disposal regulations require Waste Disposal Site operators take the following actions:

- Send copy of completed, signed Waste Shipment Form to the Waste Generator as soon as possible (no later than 30 days after disposal) after waste has been received at disposal site.
- Notify DEQ immediately by phone of improperly enclosed or uncovered waste. Submit a written report to DEQ the following working day along with copy of Waste Shipment Form.
- If you discover a discrepancy between the quantities of waste designated on the Waste Shipment Form and waste actually received, attempt to reconcile discrepancy with the Waste Generator. You must report in writing to DEQ within 15 days after receiving the waste any discrepancies not reconciled. Submit a copy of the Waste Shipment Form with this report.

State of Oregon
Department of Environmental Quality

**Air Quality**
**Asbestos Program**
2020 SW 4th Ave., Suite 400
Portland, OR 97201
Phone: (503) 229-5982
(800) 452-4011
Fax: (503) 229-6945
Contact: Susan Patterson
*www.oregon.gov/DEQ*

***DEQ is a leader in restoring, maintaining and enhancing the quality of Oregon's air, land and water.***

**For more information:**
Asbestos Control Section

Portland
Susan Patterson
503-229-5982

Salem
Dottie Boyd
503-378-5086

Medford
Steve Croucher
541-776-6107

Coos Bay
Martin Abts
541-269-2721

Bend
Frank Messina
541-633-2019

Pendleton
Tom Hack
541-278-4626

11-AQ-044
Last Updated: 7/11/12
By: Nancy Stellmach

## Accessibility information

DEQ is committed to accommodating people with disabilities. Please notify DEQ of any special physical or language accommodations or if you need information in large print, Braille or another format.

To make these arrangements, contact DEQ Communications and Outreach in Portland at 503-229-5696 or call toll-free in Oregon at 800-452-4011; fax to 503-229-6762; or email deqinfo@deq.state.or.us.

People with hearing impairments may call 711.

DEQ-DC1

# APPENDIX B

## ASN 4 – Asbestos Waste Shipment Report Form

## APPENDIX B

## ASN 4 – Asbestos Waste Shipment Report Form

# ASN 4 ASBESTOS WASTE SHIPMENT REPORT FORM

PLEASE PRINT OR TYPE. If you have questions, contact your local DEQ Regional Office in Portland 503-229-5364, Salem 503-378-5086, Medford 541-776-6107, Coos Bay 541-269-2721 ext. 222, Bend 541-633-2019, or Pendleton 541-278-4626.

**WASTE GENERATOR:** (Contractor, Facility, or Operator)

1. Asbestos removal site name and address: _____

   _____
   Street City/State County Zip

   Contact person: _____ Phone: _____

2. Contractor/Operator's name and address: _____ Phone: _____

   _____
   Street City/State County Zip

3. Waste disposal site: _____ Phone: _____

   _____
   Street City/State County Zip

4. Describe asbestos materials: _____

5. Containers: Number: _____ Type: _____

6. Total quantity (cubic yards): _____

7. **OPERATOR'S CERTIFICATION:** I hereby declare that the contents of this consignment are fully and accurately described above by proper shipping name and are classified, packaged, marked and labeled, and are in all respects in proper condition for transport according to all government regulations. All movement of this asbestos-containing material is recorded on this Waste Shipment Record Form.

   Agent: _____ Company: _____

   Address: _____ Phone: _____

**TRANSPORTER(S):**

8. Transporter #1: (Acknowledgment of receipt of materials)
   Agent: _____ Company: _____

   Address: _____ Phone: _____

   Signature: _____ Date: _____

9. Transporter #2: (Acknowledgment of receipt of materials)
   Agent: _____ Company: _____

   Address: _____ Phone: _____

   Signature: _____ Date: _____

**DISPOSAL:** (Certification of receipt of asbestos materials covered by this manifest, except as noted in item 11 below.)

10. Waste Disposal Site: _____

    Name and Title: _____ Date: _____

    Signature: _____ Phone: _____

11. **DISCREPANCY SPACE:** (Add attachments as needed) _____

    _____

    _____

    _____

(Revised 4/14)

# Instructions for using DEQ Form ASN 4
# Waste Shipment Report Form

This form is to be used as a permanent record for documenting asbestos-containing waste materials from removal site to final disposal. The Oregon Department of Environmental Quality (DEQ) regulation that applies to asbestos waste disposal is found in OAR 340-248-0280 and -0290.

## WASTE GENERATOR SECTION

(Numbers below correspond to numbers on the front of this Form)

1. Enter the name and address of the site where the asbestos waste was generated. Enter the name and phone number of the contact person for the contractor, facility, or operator of the asbestos waste generation site.
2. Enter the name, phone number and address of the person performing the asbestos abatement.
3. Enter the name, phone number and address of the disposal site that the waste is taken to.
4. Describe the materials being removed. (i.e. pipe insulation, flooring, roofing, popcorn ceiling material, HVAC system insulation, **or** nonfriable asbestos.)
5. List the total number of containers and their type. Also enter one of the following container codes used in transporting each type of asbestos material. (Specify any other type of container used if not listed below):

| | |
|---|---|
| DM | Metal drums, barrels |
| DP | Plastic drums, barrels |
| BA | 6 mil. plastic bags or wrapping |
| NFC | Leak-tight containerization for nonfriable asbestos waste material. |

6. Give an estimate of the total cubic yards of material.
7. Print clearly the name of the company and their authorized signer. This section of the form must be signed and dated.

**NOTE: The waste generator must retain a copy of the completed disposal form.**

## WASTE TRANSPORTER SECTION

8. Transporter #1: Acknowledgment of receipt of asbestos waste materials. Print agent and company name, then sign and date.
9. Transporter #2: Acknowledgment of receipt of asbestos waste materials. Print agent and company name, then sign and date.

**NOTE: If there are more than two transporters attached a new waste shipment form.**

## DISPOSAL SITE SECTION

10. List the name of the waste disposal site, print the name, title and phone number, then sign and date form. This certifies that you have received the asbestos material covered by this manifest.
11. Discrepancy space. This space is used if there is a discrepancy between the amount of the material received by the landfill and the amount of material listed on the waste shipment report form.

**NOTE: The waste disposal site operator must retain a copy of this form.**

In addition, asbestos waste disposal regulations require that the Waste Disposal Site operators take the following actions:

- Send a copy of the completed and signed Waste Shipment Report Form to the Waste Generator as soon as possible, but no later than 30 days after the waste has been received at the disposal site.
- Notify DEQ immediately by telephone of improperly enclosed or uncovered waste. Submit a written report to DEQ the following working day, along with a copy of the Waste Shipment Report Form.
- If you discover a discrepancy between the quantity of waste designated on the Waste Shipment Report Form and the quantity of waste actually received, attempt to reconcile the discrepancy with the Waste Generator. You must report, in writing, to DEQ within 15 days after receiving the waste any discrepancies that cannot be reconciled. Submit a copy of the Waste Shipment Report Form with this report.

# APPENDIX C

## ASN 6 – DEQ Notification Form – Nonfriable Asbestos Abatement

## APPENDIX C

## ASN 6 – DEQ Notification Form – Nonfriable Asbestos Abatement

# ASN 6

## DEQ NOTIFICATION FORM

### Nonfriable Asbestos Abatement

State of Oregon Department of Environmental Quality

| For DEQ use only |
|---|
| Date Received: _____ |
| Amount Received: _____ |
| Check Number: _____ |
| Project Number: _____ |

**ATTENTION!**

**CONTRACTORS/OPERATORS:** This notification is not complete unless it is accompanied by the required $100.00 fee and is submitted 5 days prior to the start date. To inquire about a waiver of the 5-day waiting period or for other information call 1-800-452-4011 for the phone number of your local regional DEQ office. Click here to find the information online.

_____ **EMERGENCY (Emergency notifications require a 50% fee increase)**

**Emergency Approved by (list DEQ staff):**_____ **Date:**_____

**List the Reason for the Emergency**_____

**(i.e. Fire or Water Damage, Dangerous Structure, etc.)**

Is this a revision to a previous notification? Yes _____ Revision#_____ No _____

Start date of project: _____ End date of project: _____

Days of week and hours to be worked: _____

Project site name: _____Building Owner: _____

Project address:_____

(Include Apt #, Floor #, Bldg #, school name or any other pertinent site location information)

City: _____ County: _____ State: _____ Zip: _____

Was a survey performed or samples collected: Yes:_____ No: _____ By whom? _____

Type of nonfriable material to be removed: _____

Amount of nonfriable asbestos material to be removed. Square or Linear footage: _____

Contractor/Operator name: _____ Phone: _____

Contractor/Operator address: _____

City: _____ County: _____ State: _____ Zip: _____

CCB registration number: _____Competent Person: _____

Waste disposal site: _____

Site address:_____

City: _____ County: _____ State: _____ Zip: _____

Waste hauler: _____ Phone: _____

**Sign below and send this form with the appropriate fee to The DEQ Business Office at 811 SW 6th Ave., Portland, OR 97204. Make checks payable to "DEQ"**

Name of owner, operator or contractor: _____

Name: _____ Phone: _____

(PLEASE PRINT)

Signature: _____ Date: _____

*I certify that the information contained in this notification are true and correct to the best of my knowledge and belief.*

**CAUTION!** If the material being removed is handled in a manner that causes it to become friable (shattered, pulverized, or reduced to dust), then only a DEQ licensed asbestos abatement contractor may perform the removal work. Submit nonfriable notifications and fees in accordance with OAR 340-248-0260. Revisions to notifications may be emailed or faxed to the appropriate DEQ regional office. Fax numbers: Portland at 503-229-6957, Bend at 541-388-8283, Pendleton 541-278-0168, Salem at 503-378-4196, Medford at 541-776-6262 or Coos Bay 541-269-7984.

**(Revised 4/14)**

# Instructions for Filing DEQ Form ASN 6
# Notice for Abatement of Nonfriable Asbestos

## Notification:

Oregon asbestos rules require written notification be given to the DEQ when abating nonfriable asbestos-containing material. Notification must be submitted on DEQ forms and accompanied by the notification fee.

Asbestos regulations require a 50 percent fee increase for projects where DEQ gives approval to waive the 5-day waiting period.

## Notification waiting period:

DEQ must receive a completed nonfriable asbestos project notification and fee at least **5 days before starting** a nonfriable asbestos abatement project. The 5-day advance notification period cannot start until the completed ASN 6 form and notification fee has been received by the Department.

DEQ **will not** send confirmation of receipt of your notification. Keep a copy of the completed notification for your files. Unless notified otherwise, you may begin your project on the scheduled starting date.

## Changing information about the project:

DEQ must be notified in writing if there are project changes prior to those changes taking place. The simplest way to do this is to email or fax DEQ a copy of the notification, circling all changes. If you need to fill out a new Form ASN 6, be sure all the originally revised sections are circled so they can be identified.

Email or fax the revisions to the appropriate regional staff.

**Fax numbers**:
Portland 503-229-6957
Salem 503-378-4196
Medford 541-776-6262
Coos Bay 541-269-7984
Bend 541-388-8283
Pendleton 541-278-0168

## Fees:

Send a check or money order along with your completed notification to DEQ. Make the check payable to “DEQ” or “Department of Environmental Quality”.

Mail to:

DEPARTMENT OF ENVIRONMENTAL QUALITY
ATTN: BUSINESS OFFICE
811 SW SIXTH AVENUE
PORTLAND OR 97204

**Filling out the form:** Be sure you complete all lines of the notification. Here are some guidelines for providing the required information:

**Revisions:** Check "yes" if this is a notification revision. Check "no" if this is a new notice.

**Project starting and completion dates:** The dates you enter here must be accurate so the 5-day waiting requirement can be met.

**Days of week and hours of day to be worked (work shift):** List the days of the week and the hours of the day that abatement will take place.

**Project site address:** Include apartment numbers, floor numbers, building numbers, school names, and any other identifying information.

**Property Owner:** Give the name of the building owner.

**Project Survey:** Was a survey performed or samples collected? Check yes or no. Who performed the survey or collected the samples? Give the name of the person or the name of the company that performed the survey or collected the samples.

**Contractor/Operator:** Give the name, address, telephone number and CCB registration (if applicable) number of the contractor or person removing the asbestos.

**Disposal site and waste hauler:** Include the name and address of disposal site and name of the waste hauler.

**DON’T FORGET TO SIGN THE FORM!**

**If you need more information call a DEQ regional asbestos program staff:**

Portland 503-229-5364
Salem 503-378-5086
Medford 541-776-6107
Coos Bay 541-269-2721 ext. 222
Bend 541-633-2019
Pendleton 541-278-4626

# APPENDIX D

## DEQ – How to Remove Nonfriable Asbestos (AC) Water Pipe

## APPENDIX D

## DEQ – How to Remove Nonfriable Asbestos (AC) Water Pipe

# How to Remove Nonfriable Asbestos Cement Pipe

**A Guide for Meeting DEQ Rules**

## Purpose

The Department of Environmental Quality (DEQ) regulates the removal, handling and disposal of asbestos-containing materials during construction, remodeling, and demolition. This document provides guidance for removing nonfriable asbestos cement (AC) pipe.

## Before you start

Contact one of the DEQ regional offices (see contact information to the right) for information on complying with Oregon's asbestos program regulations.

Oregon Occupational Safety and Health Administration (OR-OSHA) also has rules for working with asbestos-containing materials. Contact OR-OSHA at 503-378-3272 for current rule and policy information.

## How to determine if a material contains asbestos

The only way to determine if a material contains asbestos is to take a sample and have it analyzed by an accredited laboratory.

## What is asbestos cement pipe?

Asbestos cement (AC) pipe was used widely in the mid-1900's in potable water distribution systems and in sewer lines. Since the lifetime of this product is approximately 70 years, many projects to update this infrastructure involve removal of this product. The cement acts as a binder that holds the asbestos fibers within a solid matrix. This will prevent asbestos fibers from being released easily, unless mishandled, damaged, or in badly weathered condition. In most cases, AC pipe is considered nonfriable.

## Removing nonfriable AC pipe

The removal of nonfriable asbestos-containing materials in good condition is exempt from some DEQ rules. You **do not** need to be a DEQ licensed asbestos contractor or a DEQ certified asbestos worker to do nonfriable asbestos removal. If you remove AC pipe following this guide, they should remain in a nonfriable condition.

## Notification

File a DEQ notification form ASN 6 for removal of nonfriable asbestos materials and pay the applicable fee. The notification must be received by the DEQ Business Office at least 5 days prior to starting the removal project.

## Options for removing nonfriable AC pipe

AC pipe must be removed, handled and disposed of in a manner that keeps the material in predominantly whole pieces to be considered nonfriable. Sanding, sawing, grinding, chipping, or the use of power tools is not allowed. The pipe must be kept wet during removal. Wetting minimizes asbestos fibers from being released.

State of Oregon
Department of Environmental Quality

**Asbestos Program**

www.oregon.gov

**Contact Information:**

Clackamas, Clatsop, Columbia, Multnomah, Tillamook and Washington Counties, call the **Northwest Region – Portland Office** at 503-229-5982, 503-229-5364 or 800-452-4011.

Benton, Lincoln, Linn, Marion, Polk and Yamhill Counties, call the **Western Region – Salem Office** at 503-378-5086 or 800-349-7677.

Jackson, Josephine and Eastern Douglas Counties, call the **Western Region – Medford Office** at 541-776-6107 or 877-823-3216.

Coos, Curry and Western Douglas Counties, call the **Western Region – Coos Bay Office** at 541-269-2721, ext. 222.

Crook, Deschutes, Harney, Hood River, Jefferson, Klamath, Lake, Sherman and Wasco Counties, call the **Eastern Region – Bend Office** at 541-633-2019 or 866-863-6668.

Baker, Gilliam, Grant, Malheur, Morrow, Umatilla, Union, Wallowa and Wheeler Counties, call the **Eastern Region – Pendleton Office** at 541-278-4626 or 800-304-3513.

Lane County, call the **Lane Regional Air Protection Agency** at 541-736-1056.

Last Updated: 3/31/14

DEQ recommends that you use the following methods to remove AC pipe.

**1. Snap cutters**

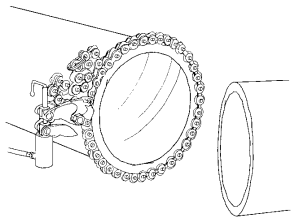

Snap cutters ("squeeze-and-pop" equipment) operate by means of cutting wheels mounted in a chain wrapper around the pipe barrel. Hydraulic pressure, applied by means of a remote, pneumatically, or manually operated pump, squeezes the cutting wheels into the pipe wall until the cut is made.

**2. Carbide-tipped blade cutters**

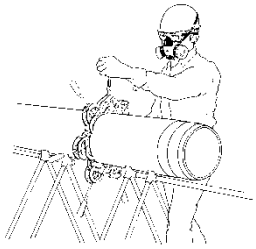

Blade cutters are frame adjustable to the circumference of the pipe and have a number of self-tracking rollers that align one or more carbide-tipped cutting blades. Because of the relatively low mechanical input and clean cutting action, hand operated blade cutters do not produce significant amounts of airborne asbestos dust.

**3. Manual field lathes**

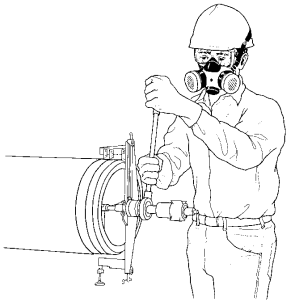

Manual field lathes are designed to end-trim and re-machine rough pipe barrels to factory-machined end profiles. The lathe consists of an adjustable, self-aligning arbor inserted into the pipe bore (which acts as a mandrel upon which the turning handle operates), a screw-fed turning frame, carbide machining blades, and manual (hand or ratchet) turning handles.

**4. Wet tapping AC pressure pipe**

Pressure or "wet" tapping for service connections is performed in the trench while the pipe is under pressure. The equipment (manual driven) is affixed to the pipe by means of a chain yoke. A combination boring-and-inserting bar drills and taps the pipe wall and inserts a corporation stop or pipe plug. The pressure chamber, which protects against water leakage, also catches the asbestos-cement chips, so this is essentially a dust-free operation.

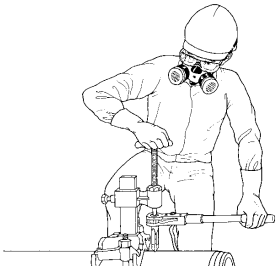

**5. Dry tapping ACD pressure pipe**

Non-pressure or "dry" tapping for service connections may be performed in or out of the trench. The equipment is affixed to the pipe by means of a chain yoke. Separate drills and taps or a combination tool is used to drill and tap the pipe wall. Corporation stops or other connections may then be affixed to the pipe.

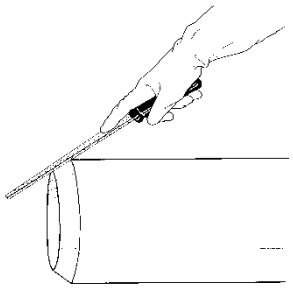

6. **Manual rasp**

Short lengths of AC pipe, machined-end exclusively (MEE) and machined overall (MOA), can be cut to make closures and repairs and to locate fittings exactly. Field-cut ends may be re-beveled with a coarse wood rasp to form a taper approximating the profile of the factory-beveled end.

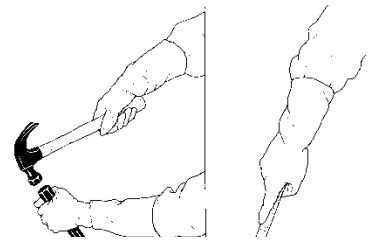

**7. Chisel and rasp**

Holes may be cut into AC pipe with a hammer and chisel. The edge of a plumber's wood chisel is used to cut completely around the hole outline, about ¼ in. (7 mm) from the prescribed line. The operation is repeated and the cut deepened until through. The edges of the hole are then dressed with a coarse wood rasp.

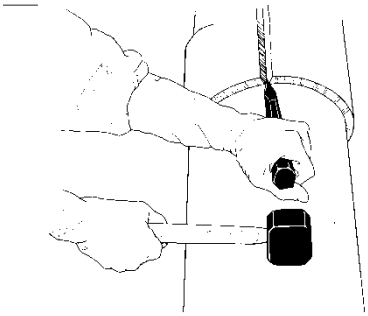

**8. Hammer and chisel**

Replacement of damaged pipe may necessitate excavation, exposure and removal. AC coupling removal may be accomplished by gradually splitting the coupling lengthwise using a chisel and hammer. After the top of the coupling has been split, a crowbar or similar tool is used as a lever to split the bottom of the coupling.

## Waste Disposal

Place the AC pipe in a leak-tight container and mark it with the warning statement "DANGER ASBESTOS-CONTAINING MATERIAL". Locate a landfill that is authorized to accept asbestos waste and be sure to inquire about hours of operation and any special packaging requirements they might have. Fill out a DEQ waste shipment report ASN 4 and give it to the landfill upon arrival.

## If the material becomes friable

If the AC pipe becomes shattered, damaged, or is badly weathered, it is considered friable and may release asbestos fibers. If the AC pipe becomes friable, stop work immediately and promptly contact a DEQ licensed asbestos abatement contractor. Friable asbestos materials must be removed by a ***DEQ licensed asbestos contractor using DEQ certified workers.***

All asbestos abatement rules under OAR 340-248-0005 through -0280 must be followed. A DEQ notification form ASN 1 for the removal of friable asbestos and the applicable fee must be filed. The notification must be received by the DEQ Business Office at least 10 days prior to starting the

removal project. For emergency situations a waiver of the 10-day period may be granted by the DEQ. For more information contact DEQ.

**Alternative Formats**

*Alternative formats of this document can be made available. Contact DEQ for more information at 503-229-5696.*

# APPENDIX E

## Molalla Avenue Improvements
## Geotechnical Engineering Design Study

# APPENDIX E

## Molalla Avenue Improvements
## Geotechnical Engineering Design Study

Geotechnical Engineering Design Study

# Molalla Urban Renewal Project

Molalla Avenue, Shaver Avenue, Hart Avenue, Metzler Avenue, and West 3rd Street Improvements
Molalla, Oregon

**Prepared for**
HDJ Design Group and the City of Molalla

**October 19, 2015**
**15949-07**

HARTCROWSER

Geotechnical Engineering Design Study

# Molalla Urban Renewal Project

## Molalla Avenue, Shaver Avenue, Hart Avenue, Metzler Avenue, and West 3rd Street Improvements

Molalla, Oregon

**Prepared for**

HDJ Design Group and the City of Molalla

**October 19, 015**
**15949-07**

**Prepared by**

Hart Crowser, Inc.

**Daniel J. Trisler, PE, GE**
Senior Associate
Geotechnical Engineer

**Timothy W. Blackwood, PE, GE, CEG**
Principal
Geotechnical Engineer

*8910 SW Gemini Drive*
*Beaverton, Oregon 97008-7123*
*Tel 503.620.7284*
*Fax 503.620.6918*

# Contents


1.0 INTRODUCTION AND PROJECT DESCRIPTION 1

2.0 SCOPE OF SERVICES 2

3.0 SITE CONDITIONS 3

**3.1 Geologic, Soils, and Groundwater Mapping 3**

**3.2 Surface Conditions 3**

**3.3 Subsurface Conditions 4**

3.3.1 General 4

3.3.2 Pavement and Soils 5

3.3.3 Groundwater 8

4.0 CONCLUSIONS 9

5.0 EARTHWORK RECOMMENDATIONS 10

**5.1 Site Preparation 10**

5.1.1 General 10

5.1.2 Demolition 10

5.1.3 Stripping 11

5.1.4 Subgrade Preparation 11

5.1.5 Utility Consideration 11

**5.2 Structural Fill and Backfill 12**

5.2.1 On-Site Soils 12

5.2.2 Recycled AC, PC, and Aggregate Base 12

5.2.3 Aggregate Base 12

5.2.4 Trench Backfill 12

5.2.5 Imported Select Structural Fill 13

5.2.6 Stabilization Material 13

5.2.7 Cement Treated Soil 13

**5.3 Fill Placement and Compaction 14**

**5.4 Excavation 15**

5.4.1 General 15

5.4.2 Temporary Cut Stability 16

**5.5 Dewatering and Temporary Drainage 17**

6.0 PAVEMENT DESIGN AND CONSIDERATIONS 17

**6.1 General 17**

**6.2 Roadway Traffic 17**

**6.3 Design Parameters 18**

**6.4 Pavement Sections 19**

6.4.1 General 19

6.4.2 Molalla Avenue 19

6.4.3 Shaver Avenue 19
6.4.4 Hart Avenue 20
6.4.5 Metzler Avenue 20
6.4.6 West 3rd Street 21
**6.5 Pavement Materials and Construction 21**
6.5.1 AC 21
6.5.2 Aggregate Base 21
6.5.3 AC Grinding 22
6.5.4 Crack-and-Seat PCC 22

7.0 CONSTRUCTION OBSERVATIONS 22

8.0 LIMITATIONS 22

9.0 REFERENCES 23

## TABLES

1 USDA Index Properties 3
2 Molalla Avenue Pavement Cores 5
3 Shaver Avenue Pavement Cores 6
4 Hart Avenue Pavement Cores 7
5 Metzler Avenue Pavement Cores 8
6 Guidelines for Uncompacted Lift Thickness 15
7 Roadway Traffic and Classification 17
8 ESAL Values 18
9 Molalla Avenue Pavement Options 19
10 Shaver Avenue Pavement Options 20
11 Hart Avenue Pavement Options 20
12 Metzler Avenue Pavement Options 21
13 West 3rd Street Pavement Options 21

## FIGURES

1 Vicinity Map
2A Exploration Plan – Molalla Avenue
2B Exploration Plan – Shaver Avenue, Hart Avenue, W 3rd Street, and Metzler Avenue

## APPENDIX A

**Field Explorations**

## APPENDIX B

**Laboratory Testing**

## APPENDIX C

**Pavement Core Photographs and DCP Data Correlations**

Geotechnical Engineering Design Study

# Molalla Urban Renewal Project

## Molalla Avenue, Shaver Avenue, Hart Avenue, Metzler Avenue, and West 3rd Street Improvements

## Molalla, Oregon

## 1.0 INTRODUCTION AND PROJECT DESCRIPTION

Hart Crowser, Inc. is pleased to present this report to HDJ Design Group (HDJ) and the City of Molalla (City) outlining our geotechnical engineering conclusions and pavement design recommendations related to the Molalla Urban Renewal projects and proposed improvements to Molalla Avenue, Shaver Avenue, Hart Avenue, Metzler Avenue, and 3rd Street. Our work was performed in general accordance with our subconsultant agreement with HDJ dated March 4, 2015, and subsequent amendments.

A brief description of the proposed improvements for each roadway are described below.

### Molalla Avenue

The Molalla Avenue improvements include approximately 3,200 lineal feet of roadway between Shirley Street at the north end and West 5th Street at the south end. The Molalla Transportation System Plan (MTSP) classifies this roadway as an "Arterial" with a design 40-foot-wide paved surface and 8-foot-wide sidewalks (56-foot right-of-way [ROW]). The proposed improvements include reconstruction of the existing roadway with the completion of the curbs and sidewalks. Existing pavement will be rehabilitated or replaced, depending upon the findings of this study. Utility work will include replacement of existing sanitary and water lines.

### Shaver Avenue

The Shaver Avenue improvements include approximately 1,200 lineal feet of roadway between Main Street (Highway 211) at the north end and 5th Street at the south end. The MTSP classifies this roadway as a "Local Street" with a design 36-foot-wide paved surface and 5-foot-wide sidewalks on either side of the roadway (46-foot ROW). The proposed improvements include reconstruction of the existing roadway with addition of curbs and sidewalks. Existing pavement will be rehabilitated or replaced, depending upon the findings of this study. Utility work will be limited.

### Hart Avenue

The Hart Avenue improvements include approximately 1,250 lineal feet of roadway between Main Street at the north end and 5th Street at the south end. The MTSP classifies this roadway as a Local Street, similar to Shaver Avenue. The proposed improvements include reconstruction of the roadway, curbs, and sidewalks. The existing 40-foot ROW will be increased to 46 feet to conform to the MTSP. The intersection of Hart Avenue at Main Street will be realigned in the future to the same alignment as Kennel Avenue to the north. Utility work will include the installation of stormwater lines.

### Metzler Avenue and West 3rd Street

The Metzler Avenue and West 3rd Street improvements include approximately 650 lineal feet of Metzler Avenue between Main Street at the north end and West 3rd Street to the south, and approximately 300 lineal feet of West 3rd Street between Metzler and Hart avenues. The MTSP classifies these roadways as Local Streets, similar to Shaver and Hart avenues. The proposed improvements on Metzler Avenue include widening and reconstruction of the roadway with curbs and sidewalks. The proposed improvements on West 3rd Street include replacing the existing gravel roadway with an asphalt paved roadway with curbs and sidewalks. Utility work will be limited.

The location of the site is shown on Figure 1. The existing site layout and exploration locations are shown on Figures 2A and 2B.

## 2.0 SCOPE OF SERVICES

The purpose of our work was to evaluate existing pavement and subsurface conditions for the proposed improvements and to provide geotechnical engineering services for design of specific project elements. Our complete scope of work is summarized below.

- Reviewed relevant, readily available geologic maps and geotechnical reports that cover the site vicinity to evaluate geologic hazards, regional soil mapping, and local soil and groundwater conditions.
- Conducted field explorations, including:
  - Advanced 14 borings,
  - Completed 25 Dynamic Cone Penetrometer (DCP) probes, and
  - Obtained 25 pavement cores from the existing roadway.
- Maintained a log of the subsurface conditions and soils encountered in the explorations and collected soil samples for laboratory testing.
- Conducted a program of laboratory testing on select soil samples.
- Conducted engineering analyses to evaluate pavement alternatives.
- Prepared this geotechnical report outlining our findings and recommendations, including information related to the following:
  - Subsurface soil and groundwater conditions,
  - Site preparation and grading,
  - Utility trench construction, and
  - Pavement design.
- Provided project management and support services, including coordinating staff and subcontractors and conducting telephone consultations and email communications with the design team.

# 3.0 SITE CONDITIONS

## 3.1 Geologic, Soils, and Groundwater Mapping

The geology of the site is mapped in the study entitled *Preliminary Report on the Geology of the Molalla Quadrangle, Oregon* (Herbert Harper 1946) as Pleistocene-age "No. 2 Gravels." These gravels are described as consisting "predominately of pebbles, cobbles and boulders of basalt and andesite." Our subsurface investigation suggests that these soils are present on site, at depth, though are blanketed by soft fill and fine-grained (silt and clay) alluvium.

The U.S. Department of Agriculture (USDA) has mapped two different near-surface soils in the vicinity of the project in the *Soil Survey of Clackamas County Area, Oregon* (Gerig 1985). These soils include Clackamas Silt Loam and Sawtell Silt Loam.

The Sawtell Silt Loam is mapped in over approximately 80 percent of the project area with the Clackamas Silt Loam mapped in localized areas, including the intersection of N Molalla Avenue and Heintz Road, the intersection of Metzler Avenue and West 3rd Street, and along the length of Metzler Avenue. The Sawtell Silt Loam and Clackamas Silt Loam soil units are described as silt or silty clay near the ground surface and extending to depths between 12 and 36 inches below ground surface (bgs). These near-surface fine-grained soils transition to very gravelly clay loam at depths below 12 to 36 inches bgs and extend to depths in excess of 60 inches bgs.

The USDA indicates the following index properties for the mapped soil units.

Table 1 – USDA Index Properties

| Soil Unit | Clay (percent) | Silt (percent) | Sand (percent) | Liquid Limit, LL | Plasticity Index | Corrosivity to Steel Pipes |
|---|---|---|---|---|---|---|
| Clackamas | 31 | 49 | 20 | 38 | 16 | High |
| Sawtell | 28 | 37 | 33 | 29 | 14 | High |

## 3.2 Surface Conditions

### Molalla Avenue

The project area on Molalla Avenue extends between the intersections of Shirley Street to the north and West 5th Street to the south. The alignment crosses through the primarily commercial downtown core to the north and approximately two blocks south of Main Street which is more residential in use. Sidewalks and curbs are present throughout, with planter strips between the sidewalks and curbs in the residential areas. Sidewalks and curbs, as well as some planter strips, are present along both sides of Molalla Avenue. Parallel parking is located along both sides of the street. Travel lane width is approximately 11 to 12 feet. Parking lanes are approximately 8 to 9 feet in width.

### Shaver Avenue

The project area on Shaver Avenue extends from Main Street to the north to the projection of West 5th Street (approximately 500 feet north of the intersection with Section Street) to the south. Shaver Avenue appears to primarily service a lumber yard and truck repair facility with a few residences. The pavement is approximately 24 feet wide with unpaved shoulders and no curbs or sidewalks.

### Hart Avenue

The project area on Hart Avenue extends from Main Street to the north to West 5th Street to the south. The pavement is approximately 34 feet wide with curbs, but limited sidewalks. The east side of Hart Avenue is primarily fronted by residential properties, while the west side is open ground primarily used by the lumber and truck maintenance yards.

### Metzler Avenue and West 3rd Street

The project areas at Metzler and 3rd include Metzler Avenue between Main and West 3rd streets, and West 3rd Street between Metzler and Hart Avenues. Metzler Avenue has a paved width of approximately 24 feet with no curbs and unpaved shoulders. Metzler Avenue is fronted by commercial properties in the northern half and residential properties in the south. West 3rd Street is an approximate 22-foot-wide gravel-surface road fronted by residential properties.

Refer to Figures 2A and 2B for the approximate extent of the project alignment.

## 3.3 Subsurface Conditions

### *3.3.1 General*

Soil conditions interpreted from geologic maps and our explorations, in conjunction with soil properties inferred from field observations and laboratory tests, formed the basis for the conclusions and recommendations contained within this report. Appendix A describes our field exploration procedures and presents field data and boring logs. Appendix B describes our laboratory soil testing procedures and results. Appendix C presents photographs of the pavement cores and DCP probe data correlations.

We explored subsurface soil and groundwater conditions at the project site by advancing 14 borings, 25 DCP probes, and 25 pavement cores. The borings were advanced to depths ranging from 4.9 to 6.5 feet bgs. The locations of the explorations are shown on Figures 2A and 2B.

Except on West 3rd Street, where gravel was present, the explorations all encountered a surface layer of asphalt concrete (AC). The AC was underlain by aggregate base, except at Molalla Avenue and Hart Avenue where old Portland cement concrete (PCC) pavement was also encountered. Below the pavement section, the native soils typically consist of 3 to more than 6 feet of soft to stiff clay or silt with variable amounts of sand and gravel. This material is generally underlain by dense to very dense clayey gravel to the depths explored (4.9 to 6.5 feet bgs), though in several cases this deeper layer was not encountered. The upper fine-grained soils typically had moisture contents between 11 and 37 percent, while the deeper soil's moisture contents were between 8 to 14 percent.

### *3.3.2 Pavement and Soils*

#### Molalla Avenue

Pavement and soil conditions along Molalla Avenue were evaluated by advancing 14 pavement cores, (C-8 through C-21), with associated DCP probes at each core, and 5 soil borings (B-7 through B-12).

The cores encountered AC pavement ranging from 3.5 to 7.3 inches thick underlain by PCC pavement ranging from 5.4 to 7.1 inches thick. Aggregate base was typically not encountered in the explorations; however, 1.0 to 6.5 inches of aggregate base was encountered in cores C-10, C-11, C-13, C-15, and C-21 underlying the pavement section. Core C-21 did not encounter PCC pavement; however, more than 12 inches of crushed rock was encountered underlying the AC pavement. The crushed rock was likely trench backfill and not indicative of the typical pavement section for Molalla Avenue. Table 2 summarizes the dimensions of the pavement cores.

Table 2 – Molalla Avenue Pavement Cores

| Core Location | AC Thickness (inches) | Number of AC Layers Present | PCC Thickness (inches) | Base Condition |
|---|---|---|---|---|
| C-8 | 7.3 | 1 | 6.8 | Clay subgrade |
| C-9 | 5.4 | 2 | 6.2 | Clay subgrade |
| C-10 | 4.5 | 1 | 0 | 6.5 inches of loose to medium dense aggregate base |
| C-11 | 3.5 | 1 | 0 | 3.0 inches of medium dense to dense aggregate base |
| C-12 | 3.5 | 1 | 6.1 | Clay subgrade |
| C-13 | 3.6 | 2 | 6.1 | Clay subgrade |
| C-14 | 3.8 | 1 | 5.5 | Clay subgrade |
| C-15 | 4.8 | 2 | 5.4 | 1.0 inch of loose to medium dense aggregate base |
| C-16 | 4.1 | 1 | 5.4 | Clay subgrade |
| C-17 | 5.8 | 1 | 7.1 | Clay subgrade |
| C-18 | 3.8 | 1 | 6.1 | Clay subgrade |
| C-19 | 4.9 | 1 | 6.0 | Clay subgrade |
| C-20 | 3.9 | 1 | 6.6 | 2.0 inches of loose to medium dense aggregate base |
| C-21 | 6.0 | 2 | 0 | 12.0 inches of medium dense aggregate base (trench fill) |

Pavement surface conditions along this section of roadway are marginal. The project RFP indicates the estimated Pavement Condition Index (PCI) for the road is between 50 and 60, which typically implies a structural overlay or complete reconstruction is warranted.

Numerous areas of reflection cracking were evident in the proposed improvement area. Molalla Avenue in the proposed improvement area is underlain by older PCC. The concrete pavement appears to underlay much of the current travel lanes, but does not appear to underlay areas of the parallel parking along Molalla Avenue. The reflection cracking observed along Molalla Avenue is likely the result of differential movement across the underlying concrete slabs, as well as edges of the PCC adjacent to side parking areas.

Asphalt structural fatigue in the form of longitudinal cracking is also apparent along some of the utility trench patches found on Molalla Avenue. This is particularly evident along a communications utility trench located on the western lane north of Main Street. The trenching likely entailed saw cutting through the old PCC pavement. The subsequent AC patch is experiencing cracking along the joint between the old PCC and the trench line AC patch. The trench line also appears to be within the wheel path of traffic.

The onset of fatigue cracking (alligator cracking) is also evident along utility trench patch areas. Fatigue cracking typically occurs in areas subjected to repeated traffic loadings (wheel paths). Fatigue cracking is characterized by a series of interconnected cracks in early stages of development. It usually develops into many-sided, sharp-angled pieces, usually less than 12 inches on the longest side.

The causes of fatigue cracking are often attributable to subgrade soil failure or thin asphalt sections. However, other causes can include poor drainage saturating subgrade soils and in turn resulting in subgrade softening and eventual failure. Repeated heavy wheel loading has also been found to result in fatigue cracking.

The five soil borings (B-7 through B-12), were advanced below cores C-8, C-12, C-14, C-16, C-18, and C-20. Moist to dry brown clay was encountered underlying the pavement and aggregate base in the borings. The clay contains varying gravel and sand content and ranges in relative consistency from medium stiff to very stiff. The clay extends to depths of 4 to 5 feet bgs in borings B-7 through B-9, B-11, and B-12. Boring B-10 was terminated in the clay at 6.5 feet bgs. Moist to dry, brown clayey gravel in a dense to very dense condition was encountered underlying the clay.

## Shaver Avenue

Pavement and soil conditions were evaluated by advancing four pavement cores (C-22 through C-25), with associated DCP probes at each core, and two soil borings (B-13 and B-14) along Shaver Avenue.

The cores encountered AC pavement ranging from 4.4 to 5.5 inches thick underlain by crushed rock aggregate base ranging from 7.5 to 20 inches thick. Table 3 summarizes the dimensions of the pavement cores.

### Table 3 – Shaver Avenue Pavement Cores

| Core Location | AC Thickness (inches) | Number of AC Layers Present | Base Condition |
|---|---|---|---|
| C-22 | 4.4 | 1 | 20 inches of medium dense aggregate base |
| C-23 | 5.5 | 2 | 7.5 inches of loose to medium dense aggregate base |
| C-24 | 4.5 | 1 | 13.5 inches of loose to medium dense aggregate base |
| C-25 | 4.8 | 1 | 9.3 inches of medium dense aggregate base |

Pavement along Shaver Avenue is in fair to good shape. The PCI index for Shaver Avenue has been identified between 70 and 80. Some areas of block cracking are evident along Shaver Avenue. Block cracking is typically characterized by a pattern of cracks that divides the pavement into approximately square or rectangular pieces. Block sizes can range from approximately 1 square foot to 30 square feet.

Block cracking is often the result of thermal expansion and shrinkage of asphalt from daily temperature fluctuations. It is typically caused by an inability of the asphalt binder to expand and contract with daily temperature cycles because of either asphalt binder aging, or mix design and asphalt binder choice. Low traffic levels can also contribute to block cracking.

Two soil borings (B-13 and B-14) were advanced below cores C-22 and C-24. Moist, brown, stiff clay to silty clay was encountered underlying the pavement and aggregate base in both borings. The clay extends to a depth of 5 feet bgs in boring B-13. Boring B-14 was terminated in the clay at 6.5 feet bgs. Dry, brown, dense clayey gravel was encountered underlying the clay in boring B-13, and the boring was terminated in this material at 6.5 feet bgs.

## Hart Avenue

Pavement and soil conditions along Hart Avenue were evaluated by advancing four pavement cores (C-1 through C-4), with associated DCP probes at each core, and two soil borings (labeled B-1 and B-2).

Cores C-2 through C-4 encountered AC pavement ranging from 2.6 to 5.8 inches thick underlain by PCC pavement ranging from 7.0 to 9.9 inches thick. Core C-1 encountered 5.8 inches of AC pavement underlain by 7.3 inches of aggregate base. Table 4 summarizes the dimensions of the pavement cores.

Table 4 – Hart Avenue Pavement Cores

| Core Location | AC Thickness (inches) | Number of AC Layers Present | PCC Thickness (inches) | Base Condition |
|---|---|---|---|---|
| C-1 | 5.8 | 1 | 0 | 7.3 inches of medium dense aggregate base |
| C-2 | 5.0 | 1 | 7.4 | Clay subgrade |
| C-3 | 2.6 | 2 | 7.0 | Clay subgrade |
| C-4 | 3.3 | 1 | 9.9 | Clay subgrade |

Pavement along Hart Avenue is in poor to fair shape. The PCI index for Hart Avenue has been estimated between 50 and 60. A PCI of 50 to 60 typically implies a structural overlay or complete reconstruction is warranted.

Block cracking and areas of fatigue cracking are evident along Hart Avenue. As with Molalla Avenue, fatigue and longitudinal cracking was evident along utility trench patch areas, particularly the AC above a gas trench line on the west side of the road and sewer trench line along the east side of the road. Reflection cracking was also present and likely the result of construction joints or cracking within the underlying PCC pavement.

Two soil borings (B-1 and B-2) were advanced below cores C-1 and C-4. Moist, brown, medium stiff to stiff, clay to silty clay with varying amounts of gravel was encountered underlying the pavement and aggregate base in both borings. The clay extends to depths ranging from 3.5 to 5 feet bgs. Dry, brown to brown and gray, medium dense to dense silty gravel was encountered underlying the clay in both borings.

### Metzler Avenue

Pavement and soil conditions along Metzler Avenue were evaluated by advancing three pavement cores (C-5 through C-7), with associated DCP probes at each core, and two soil borings (B-5 and B-6). The cores encountered AC pavement ranging from 3.5 to 7.0 inches thick underlain by crushed rock aggregate base ranging from 1.0 to 4.5 inches thick. Table 5 summarizes the dimensions of the pavement cores.

Table 5 – Metzler Avenue Pavement Cores

| Core Location | AC Thickness (inches) | Number of AC Layers Present | Base Condition |
|---|---|---|---|
| C-5 | 3.5 | 1 | 4.5 inches of loose to medium dense aggregate base |
| C-6 | 7.0 | 1 | 1.0 inch of loose to medium dense aggregate base |
| C-7 | 4.0 | 1 | 1.5 inches of loose to medium dense aggregate base |

Pavement along Metzler Avenue is in fair shape. The PCI index for Metzler Avenue has been estimated between 60 and 70. Block cracking and areas of fatigue cracking are evident along Metzler Avenue, particularly along the northern half of the proposed improvement. Road shoulder cracking, primarily fatigue cracking, is evident at the intersection of West 3rd Street and Metzler Avenue.

Two soil borings (B-5 and B-6) were advanced below cores C-5 and C-7. Moist, brown, stiff to very stiff silty clay with varying gravel and sand content was encountered underlying the pavement and aggregate base in both borings. The silty clay extends to a depth of 6 feet bgs in boring B-5. Boring B-6 was terminated in the silty clay. Moist, brown, very dense clayey gravel was encountered underlying the silty clay in boring B-5, and the boring was terminated in the clayey gravel.

### West 3rd Street

Pavement and soil conditions along West 3rd Street were evaluated by advancing two soil borings (B-3 and B-4) and associated DCP probes.

West 3rd Street is unpaved and covered with an 8.0- to 8.5-inch-thick section of crushed rock. Numerous potholes in the gravel road are evident on West 3rd Street.

The two borings encountered moist, brown, stiff to very stiff silty clay with varying gravel and sand content underlying the crushed rock. The silty clay extends to a depth of 4.5 feet bgs in boring B-3. Boring B-4 was terminated in the silty clay. Dry, brown, medium dense clayey gravel was encountered underlying the silty clay in boring B-3, and the boring was terminated in the clayey gravel.

## *3.3.3 Groundwater*

Groundwater was not encountered in any of our explorations to the shallow depths explored. However, based on our experience in the area, we anticipate shallow perched groundwater is present throughout the improvement areas. The depth of perched groundwater will vary throughout the year, depending on rainfall amounts, and could approach the ground surface during heavy rainfall periods.

# 4.0 CONCLUSIONS

Based on our explorations, testing, and analyses, it is apparent that subsurface soil conditions are relatively uniform throughout the Urban Renewal improvement area. The AC pavements are typically in poor to fair condition. PCC pavement underlies the AC along Molalla Avenue and Hart Avenue, which will require special consideration. The project alignments are suitable for the proposed road construction, provided the recommendations in this report are included in design and construction.

Roadway designers and contractors should consider the following items.

- The condition of the existing AC pavement in the project work area ranges from poor to good. In general complete replacement of most pavement sections is recommended, though some pavement rehabilitation may be appropriate.
    - **Molalla Avenue:** AC pavement is generally in poor condition. The pavement is a candidate for complete replacement, though there are several options due to the presence of underlying PCC pavement. (The PCC will need to be removed or broken down via the "crack and seat" methodology to prevent reflective cracking from transmitting through the new AC.)
    - **Shaver Avenue:** AC pavement is in fair to good condition. The pavement can be rehabilitated via grind and inlay, or can be replaced with a full new section.
    - **Hart Avenue:** AC pavement is in poor to fair condition. As with Molalla Avenue, the AC is underlain by PCC and the pavement is a candidate for complete replacement.
    - **Metzler Avenue:** AC pavement is in fair condition. There is limited aggregate base underlying the AC, so complete replacement will be required to provide a suitable aggregate base layer for new AC.
    - **West 3rd Street:** The street is currently unpaved, though has an approximately 8-inch-thick section of aggregate base surfacing. New AC can be installed over the existing aggregate base or a complete new pavement section can be installed.
- The native soils that blanket the project area are fine-grained (silt and clay), soft to stiff, and are typically moist.
    - These materials will be easily disturbed by construction equipment, causing rutting, pumping, and general deterioration of subgrades when trafficked. We recommend that the contractor limit trafficking on the subgrade and/or employ wet weather practices.
    - Due to the disturbable nature of the subgrade soils, it will not be reasonably possible to compact new aggregate base materials on top of the native subgrade without employing stabilization techniques, such as thickened rock sections or cement amendment.
    - The native soils will require significant aeration/drying to use as structural fill. For planning purposes, they should be considered unsuitable for reuse as structural fill.
- Shallow perched groundwater may result in the need for trench and excavation dewatering during earthwork activities, depending on the time of construction.

The following sections present our recommendations for geotechnical aspects of roadway design and related development. Our geotechnical investigation and engineering analyses have been performed in accordance with generally accepted geotechnical practices. We have developed our conclusions and recommendations based on our current understanding of the project. If the nature of the project or the location of specific project elements are altered from those described in this report, Hart Crowser should be notified so we can confirm or modify our recommendations.

# 5.0 EARTHWORK RECOMMENDATIONS

Based on available information, we estimate mass grading for the site will be limited, with shallow areal excavations being made to accommodate aggregate base sections for reconstructed or newly constructed roadways, curbs, and sidewalks. However, because of soft, moist soil conditions, proper planning and execution of earthwork will have significant implications for successful completion of the project.

All earthwork should be conducted in accordance with City of Molalla requirements and the Oregon Standard Specifications for Construction (OSSC) (ODOT 2015). Specific recommendations for earthwork are provided in the following sections.

## 5.1 Site Preparation

### *5.1.1 General*

The majority of the site soils are highly susceptible to moisture-related disturbance. Wet soil construction practices will be necessary throughout most of the year, particularly during periods of wet weather. Wet soil construction practices include limiting trafficking on exposed subgrades and using equipment, such as smooth excavator buckets and tracked equipment, to limit subgrade disturbance, etc. Due to widespread soft, wet conditions, the existing soil subgrade will not be suitable for placement of aggregate base or fill material without prior stabilization, as discussed later.

### *5.1.2 Demolition*

Demolition should include complete removal of existing site improvements within areas to receive new pavements, curbs, or sidewalks. Underground utility lines, vaults, or tanks that are to be abandoned should be completely removed or grouted full if left in place.

Voids resulting from removal of below grade structures or loose soil in utility lines should be backfilled with compacted structural fill, as discussed in *Section 5.2 - Structural Fill and Backfill*. The bases of such excavations should be completed to a firm subgrade before filling, and their sides sloped slightly to allow for more uniform compaction at the edges of the excavations.

Materials generated during demolition of existing improvements should be transported off site for disposal or stockpiled in areas designated by the City. In general, these materials will not be suitable for reuse as engineered fill. However, asphalt, concrete, and base rock material may be crushed and recycled for use as general fill. Such recycled material should meet the specifications for imported granular material, as described in *Section 5.2 - Structural Fill and Backfill*.

Refer to Section 6.0 – Pavement Design and Considerations for discussion regarding AC grinding and "crack-and-seat" preparation of existing PCC.

### *5.1.3 Stripping*

We anticipate most of the improvements will not require stripping of the existing ground surface; however, some stripping will be required in localized areas throughout the project and for the road widening at Hart Avenue. Actual stripping depths should be evaluated, based on observations during the stripping operation. The prepared subgrade should be observed and approved by the engineer. Generally, visible organic material (sod, roots larger than 1/4 inch diameter, and/or other plant material), debris, and other unsuitable materials should be removed from the subgrade areas. Such material will not be suitable for use as structural fill and should be hauled off site as designated by the City.

### *5.1.4 Subgrade Preparation*

Wherever possible, the contractor should work from existing paved surfaces and limit trafficking onto exposed soil subgrades. As noted in Section 6.0 – Pavement Design and Considerations, our new pavement designs assume that the pavement subgrade will be augmented by the installation of an 18-inch-thick layer of stabilization rock or by 12 inches of cement amended subgrade. These measures are to provide a stable subgrade for compaction of aggregate base and AC. The contractor is responsible for providing additional stabilization material, if needed, to protect the subgrade from disturbance caused by construction traffic. The contractor should not attempt to compact the native soil subgrade prior to implementing one of the stabilization measures discussed above.

Following subgrade excavation and prior to implementing stabilization measures, the suitability of the subgrade should be evaluated by Hart Crowser. It is unlikely that the typical proofrolling with a fully loaded dump truck or similar heavy rubber-tired construction equipment will be suitable due to soft conditions. The evaluation will likely include use of a steel T-probe to identify any excessively soft areas. If excessively soft zones are identified during the evaluation, then additional subgrade excavation may be required.

### *5.1.5 Utility Consideration*

Underground utilities should be installed prior to installation of geotextile and stabilization rock or cement amendment of the subgrade; otherwise, utility construction will disturb these stabilization measures.

## 5.2 Structural Fill and Backfill

Structural fill includes fill for embankments; for slab and pavement support, such as aggregate base; and other fill within the influence zone of structures adjacent to the improvement area. Fill should only be placed over a subgrade that has been prepared in accordance with *Section 5.1 - Site and Subgrade Preparation* of this report. A variety of soils may be used as structural fill, provided they are free of debris, clay balls, roots, organic matter, frozen soil, man-made contaminants, particles exceeding 4 inches in size, and other deleterious material. Structural fill should meet the appropriate specifications provided in OSSC 00330.12 – Borrow Material, 00330.13 – Selected General Backfill, or 00330.14 – Selected Granular Backfill.

Fill and backfill material should be placed and compacted in lifts with maximum uncompacted thicknesses and relative densities as recommended in the tables that follow.

### *5.2.1 On-Site Soils*

In general, the native materials in the project area consist of moist, fine-grained soils. Deeper, native soils are granular (including cobbles), but these generally are not expected to be in the zone of mass excavation. In general, the native soils will not be suitable for reuse as structural fill. However, the existing aggregate base can be reused as aggregate base or structural fill as noted below.

### *5.2.2 Recycled AC, PC, and Aggregate Base*

Existing AC, PCC, and aggregate base from the site can be used in general structural fill, provided they are thoroughly and uniformly crushed with no particles greater than 3 inches. If used as trench backfill, this material should not be used within the pipe zone. The recycled materials should meet the specifications provided in OSSC 00330.13 – Selected General Backfill.

### *5.2.3 Aggregate Base*

Imported granular material used as aggregate base beneath pavements or slabs should be clean, crushed rock or crushed gravel and sand that is fairly well graded between coarse and fine. The base aggregate should meet the specifications provided in OSSC 02630.10 – Dense Graded Base Aggregate, depending upon application. For use beneath sidewalks we generally recommend the rock have a maximum particle size of 0.75 or 1 inch.

### *5.2.4 Trench Backfill*

Trench backfill placed beneath, adjacent to, and for at least 12 inches above utility lines (i.e., the pipe zone) should meet City and ODOT specifications and consist of well-graded granular material with a maximum particle size of 3/4 inch and less than 10 percent by dry weight passing the U.S. Standard No. 200 Sieve, and should meet the specifications provided in OSSC 00405.13 –Pipe Zone Material.

Within roadway alignments, the remainder of the trench backfill up to the subgrade elevation should consist of well-graded granular material with a maximum particle size of 3 inches, have less than 10 percent by dry weight passing the U.S. Standard No. 200 Sieve, and meet the specifications provided in OSSC 00405.14 – Trench Backfill, Class B or D.

Outside of structural improvement areas, trench backfill placed above the pipe zone may consist of general fill materials that are free of organics and material over 6 inches in diameter and meet the specifications provided in OSSC 00330.12 – Borrow Material.

### *5.2.5 Imported Select Structural Fill*

Imported granular material used as structural fill during periods of wet weather should be pit or quarry run rock, crushed rock, or crushed gravel and sand and should meet the specifications provided in OSSC 00330.14 – Selected Granular Backfill, 00330.15 – Selected Stone Backfill, or 00330.16 – Selected Stone Embankment. The imported granular material should also be angular, fairly well graded between coarse and fine material, have less than 5 percent by dry weight passing the U.S. Standard No. 200 Sieve, and have at least two mechanically fractured faces.

### *5.2.6 Stabilization Material*

If imported granular material is used to stabilize subgrade excavations or to create haul roads for construction traffic, we recommend that material consist of pit or quarry run rock, or crushed rock. The material should generally be sized between 2 and 6 inches, have less than 5 percent by dry weight passing the U.S. Standard No. 4 Sieve, and have at least two mechanically fractured faces. The material should be free of organic matter and other deleterious material. Material meeting the specifications of OSSC 00330.16 – Stone Embankment, though with the maximum size noted above is generally acceptable, as are quarry spalls, ballast, and other similar clean angular materials.

Stabilization material should be separated from the base of soft or fine-grained subgrades with a layer of subgrade geotextile that meets the specifications provided in OSSC 02320.20 – Geotextile Property Values for subgrade geotextile (separation). The geotextile should be installed in conformance with the specifications provided in OSSC 00350 – Geosynthetic Installation.

Stabilization material should be placed atop the geotextile in an initial 12-inch loose lift. The rock should be compacted with a 2- to 3-ton, smooth dual-drummed roller operating in “static” mode to a well “keyed” condition. The remaining 6 inches of rock should be placed and compacted to 95 percent of the rock’s maximum dry density as determined by ASTM International (ASTM) D 1557/American Association of State Highway and Transportation Officials (AASHTO) T-180.

### *5.2.7 Cement Treated Soil*

As an alternative to the use of stabilization material for subgrade protection, an experienced contractor may be able to amend the on-site soils with Portland cement to obtain suitable support properties. Successful use of soil amendment depends on the use of correct mixing techniques, soil moisture content, and amendment quantities. Specific recommendations for soil amending, based on exposed site conditions, can be provided if necessary. Soil amending should be conducted in accordance with the specifications provided in OSSC 00344 – Treated Subgrade.

For budgeting purposes, we recommend 6 percent cement (by dry weight) be used for soil treatment. A dry weight of 110 pounds per cubic foot (pcf) should be assumed for the soil. Actual percentages of cement will need to be based on *in situ* soil moisture contents and other field conditions at the time of

amendment. As part of their bidding for the project, the specialty amending contractor should evaluate whether multiple passes will be required to treat the subgrade due to the soft nature of the soil.

Portland cement-amended soils are hard and have low permeability. These soils do not drain well, nor are they suitable for planting. Future planted areas should not be cement amended, if practical, or accommodations should be made for drainage and planting. Moreover, cement amending soil within building areas must be done carefully to avoid trapping water under floor slabs. We should be contacted if this approach is considered. Cement amendment should not be used if runoff during construction cannot be directed away from adjacent wetlands.

To protect the cement-treated surfaces from abrasion, “slickening,” or other damage, the treated surface should be covered with 4 to 6 inches of imported granular material before it is tracked by equipment. The crushed rock typically becomes contaminated with soil during construction. Contaminated base rock should be removed and replaced with clean rock in pavement areas.

It is not possible to amend soils during heavy or continuous rainfall. Work should be completed during suitable conditions. To prevent strength loss during curing, cement-amended soil should be allowed to cure for a minimum of 4 days prior to access by construction traffic.

The cement amending contractor should be made aware that some cobbles are present in the site soils. They are generally found below proposed treatment depths, though cobbles may be encountered by their tilling equipment. Cobbles will need to be removed from subgrade areas that are being cement amended.

## 5.3 Fill Placement and Compaction

Structural fill should be placed and compacted in accordance with OSSC 00330.43 – Earthwork Compaction requirements and the following guidelines.

- Place fill and backfill on a prepared subgrade that consists of firm, inorganic native soils or approved structural fill.
- Place fill or backfill in uniform horizontal lifts with a thickness appropriate for the material type and compaction equipment. Table 6 provides general guidance for uncompacted lift thicknesses.

Table 6 – Guidelines for Uncompacted Lift Thickness

| Compaction Equipment | Guidelines for Uncompacted Lift Thickness (inches) | | |
|---|---|---|---|
| | Native Soils | Granular and Crushed Rock Maximum Particle Size ≤ 1½ inch | Crushed Rock Maximum Particle Size > 1½ inch |
| Plate Compactors and Jumping Jacks | 4 – 8 | 4 – 8 | Not Recommended |
| Rubber-Tire Equipment | 6 – 8 | 10 – 12 | 6 – 8 |
| Light Roller | 8 – 10 | 10 – 12 | 8 – 10 |
| Heavy Roller | 10 – 12 | 12 – 18 | 12 – 16 |
| Hoe Pack Equipment | 12 – 16 | 18 – 24 | 12 – 16 |

Note: The above table is based on our experience and is intended to serve as a guideline. The information provided in this table should not be included in the project specifications.

- Do not place fill and backfill until the required tests and evaluation of the underlying materials have been made and the appropriate approvals have been obtained.
- Limit the maximum particle size within the fill to two-thirds of the loose lift thickness.
- Control the moisture content of the fill to within 3 percent of the optimum moisture content based on laboratory Proctor tests. The optimum moisture content corresponds to the moisture content at the maximum attainable Proctor dry density.
- Perform a representative number of in-place density tests on structural fill in the field, to verify adequate compaction.

During structural fill placement and compaction, a sufficient number of in-place density tests should be completed by Hart Crowser to verify that the specified degree of compaction is being achieved. For structural fill with more than 30 percent retained on the 3/4-inch sieve, proper compaction should be verified with a proofroll or other performance methods.

## 5.4 Excavation

### *5.4.1 General*

Site soils within expected excavation depths generally consist of clay, silty clay, or clayey gravel and cobbles. In our opinion, conventional earthmoving equipment in proper working condition should be capable of making necessary general excavations for utilities and other earthwork. Cobbles and boulders are present at the site. Excavations into these materials should be possible with conventional earthwork equipment, though localized difficult excavation may occur when cobbles or boulders are encountered. The presence of these materials may cause trenches to cave or slough, resulting in greater than anticipated backfill quantities. The earthwork contractor should be responsible for providing equipment and following procedures as needed to excavate the site soils, as described in this report, while protecting the subgrade.

### *5.4.2 Temporary Cut Stability*

Because of the variables involved, actual slope angles required for stability in temporary cut areas can only be estimated before construction. We recommend that stability of the temporary slopes used for construction be the responsibility of the contractor, since the contractor is in control of the construction operation and is continuously at the site to observe the nature and condition of the subsurface.

All temporary soil cuts associated with site excavations (greater than 4 feet in depth) should be adequately sloped back to prevent sloughing and collapse, in accordance with Occupational Safety and Health Administration (OSHA) guidelines. The stability and safety of cut slopes depend on a number of factors, including:

- The type and density of the soil;
- The presence and amount of any seepage;
- Depth of cut;
- Proximity and magnitude of the cut to any surcharge loads, such as stockpiled material, traffic loads, or structures;
- Duration of the open excavation; and
- Care and methods used by the contractor.

All excavations should be made in accordance with all local, state, and federal safety requirements. According to OSHA guidelines, we expect that the existing site soils would be considered Type C.

Where groundwater seepage is encountered within excavation slopes, the cut slope inclination may have to be flatter than 1.5H:1V. However, appropriate inclinations will ultimately depend on the actual soil and groundwater seepage conditions exposed in the cuts at the time of construction. It is the responsibility of the contractor to ensure that the excavation is properly sloped or braced for worker protection, in accordance with OSHA guidelines. To assist with this effort, for planning purposes only, we make the following recommendations regarding temporary excavations.

- Protect excavations from erosion with plastic sheeting for the duration of the excavation to minimize surface erosion and raveling;
- Limit the maximum duration of the open excavation to the shortest time period possible; and
- Place no surcharge loads (equipment, materials, etc.) within 10 feet of the top of excavations.

More restrictive requirements may apply depending on specific site conditions, which should be continuously assessed by the contractor.

If temporary sloping is not feasible based on site spatial constraints, excavations could be supported by internally braced shoring systems, such as a trench box or other temporary shoring. There are a variety of options available. We recommend that the contractor be responsible for selecting the type of shoring system to apply.

## 5.5 Dewatering and Temporary Drainage

Shallow perched groundwater may be present within the depths of utility excavations; therefore; trenching operations may require dewatering. Refer to *Section 3.3.3 - Groundwater* for a discussion of groundwater conditions at the site. Dewatering is typically the responsibility of the contractor. Pumping from sumps located within the excavation will likely be effective in removing water resulting from seepage. Deeper trenching and excavation work may require well point dewatering, though this is not anticipated. Failure to dewater can result in issues, such as base heave, sidewall caving and sloughing, increased backfill and haul off requirements, and project delays.

During grading at the site, the contractor should be made responsible for temporary drainage of surface water as necessary to prevent standing water and/or erosion of the working surface. During rough and finished grading of the roadway alignment, the contractor should keep subgrades free of water.

# 6.0 PAVEMENT DESIGN AND CONSIDERATIONS

## 6.1 General

Paving for the project includes new and/or rehabilitated AC pavements. Pavements should be constructed in accordance with City standards and OSSC 00744 – Asphalt Concrete Pavement.

## 6.2 Roadway Traffic

The following traffic loading criteria for the pavement design were based on guidelines found in the *ODOT Pavement Design Guide* (ODOT 2011) and on traffic estimates provided by HDJ Design Group:

- A 20-year design life for new and rebuilt pavement sections
- A 15-year design life for rehabilitated pavement sections
- Average daily traffic (ADT) values, heavy truck percentages, roadway classifications, and reliability values as shown in Table 7

### Table 7 – Roadway Traffic and Classification

| Road | ADT | Heavy Truck (percent) | Classification | Reliability |
|---|---|---|---|---|
| Molalla Avenue | 2,250 | 10 | Rural, Major Collector | 85 |
| Shaver Avenue | 1,000 | 10 | Rural, Minor Collector | 80 |
| Hart Avenue | 1,000 | 10 | Rural, Minor Collector | 80 |
| Metzler Avenue | 1,000 | 5 | Rural, Local | 75 |
| 3rd Street | 1,000 | 5 | Rural, Local | 75 |

Notes:

ADT values are one-way values.
Classifications and reliability values are based on ODOT (2011) guidance.

- For Molalla, Hart, and Shaver Avenues, vehicle types were broken into the following Federal Highway Administration (FHWA) classifications:
  - Type 1, 2, and 3 – 90 percent of ADT Total
  - Types 4, 5, and 6 – 1.5 percent of ADT each
  - Type 8 and 9 – 2.5 percent of ADT each
  - Type 10 – 0.5 percent of ADT

- For Metzler Avenue and West 3rd Street, vehicle types were broken into the following FHWA classifications:
  - Types 1, 2, and 3 – 95 percent of ADT Total
  - Types 4, 5, 6, 8, and 9 – 1 percent of ADT each
  - Type 10 – 0 percent of ADT

Based on the data outlined above and equivalent single-axle load (ESAL) factors in ODOT (2011), we calculated the ESAL values summarized in Table 8.

### Table 8 – ESAL Values

| Road | 20-year ESAL (new section) | 15-year ESAL (rehabilitated section) |
|---|---|---|
| Molalla Avenue | 2,000,000 | 1,375,000 |
| Shaver Avenue | 900,000 | 625,000 |
| Hart Avenue | 900,000 | 625,000 |
| Metzler Avenue | 400,000 | 275,000 |
| West 3rd Street | 400,000 | n/a |

## 6.3 Design Parameters

The following pavement design parameters were based on guidelines found in ODOT (2011) and *AASHTO Guide for Design of Pavement Structures* (AASHTO 1993):

- Average resilient modulus of 4,500 pounds per square inch (psi) for native soil subgrade (this value is based on our in situ DCP testing and ODOT [2011] data correlations)

- A resilient modulus of 20,000 psi for base rock.

- Structural coefficients of 0.42 and 0.10 for new asphalt and base rock layers, respectively

- Structural coefficient of 0.25 and 0.275 for existing AC and concrete pavement layers, respectively

- Structural coefficient of 0.075 for a native soil subgrade that has been cement treated or for stabilization rock with a geotextile fabric

## 6.4 Pavement Sections

### 6.4.1 General

The following section describes options for new and/or rehabilitated pavements on each project road segment. Due to generally soft and moist subgrade conditions beneath all road segments, where new pavement sections are installed, it should be assumed that subgrade stabilization work will be required. We have prepared new pavement sections that include either 18 inches of stabilization rock or 12 inches of cement amended soil subgrade. New pavement sections have a 20-year design life, while rehabilitated (e.g., grind and overlay) pavements have a 15-year design life, in accordance with ODOT (2011).

For Molalla and Hart avenues, the existing AC is underlain by PCC pavement. Due to joints, utility cuts, and cracks in the PCC, a large amount of reflective cracking will transmit through new AC if the PCC is left in place. Therefore, we have recommended the use of the "crack-and-seat" method of breaking up the PCC to reduce the potential for reflective cracking. Refer to *Section 6.5 - Pavement Materials and Construction* for additional discussion regarding crack-and-seat. However, because the PCC bears directly on the native subgrade, we consider it to be somewhat risky to attempt cracking-and-seating, since there is a potential that the native subgrade may become disturbed during the process.

### 6.4.2 Molalla Avenue

The existing pavement section at Molalla Avenue is in poor condition. The existing AC thickness varies from 3.5 to 7.3 inches and is typically underlain by PCC, except at past utility trenches and in parking stalls. Where present, the PCC bears directly on the native subgrade.

The entire pavement section should be rebuilt, or new AC can be placed atop the existing PCC that has been cracked and seated. Table 9 summarizes pavement section options for Molalla Avenue.

Table 9 – Molalla Avenue Pavement Options

| Classification | AC (inches) | Aggregate Base (inches) | Subgrade |
|---|---|---|---|
| New Pavement Section | 6.5 | 5.5 | 18 inches stabilization rock over geotextile |
| | 6.5 | 10.0 | 12 inches of cement amended soil |
| New AC with Crack and Seat PCC | 6.5 | n/a | Crack and seat existing PCC. Install 24 inches of aggregate base if PCC not present. |
| New Pavement Section at Parking Stalls | 3.0 | 2.0 | 12 inches stabilization rock over geotextile |
| | 3.0 | 4.0 | 10 inches of cement amended soil |

### 6.4.3 Shaver Avenue

The existing pavement section at Shaver Avenue is in fair to good condition, and the AC thickness is generally uniform (average 4.8 inches). The upper 2 inches of AC is a fragmented overlay. The AC is underlain by 7.5 to 20 inches of aggregate base.

It is possible to grind and overlay the existing pavement, though some reflective cracking in the AC will likely occur in the future. Also, the civil designer will need to determine if there are conflicts with grades due to the increased thickness of overlay. Alternatively, the existing pavement can be removed and a new uniform section installed. Table 10 summarizes pavement section options for Shaver Avenue.

Table 10 – Shaver Avenue Pavement Options

| Classification | AC (inches) | Aggregate Base (inches) | Subgrade |
|---|---|---|---|
| New Pavement Section | 5.5 | 2.5 | 18 inches stabilization rock over geotextile |
| | 5.5 | 7.0 | 12 inches of cement amended soil |
| Grind and Overlay | 5.0 | n/a | Grind upper 2.0 inches of existing AC, and place new AC on *in situ* materials |

### *6.4.4 Hart Avenue*

The existing pavement section at Hart Avenue is in poor to fair condition. The existing AC thickness varies from 2.6 to 5.8 inches. The AC is underlain by PCC, which bears directly on the native subgrade.

The entire pavement section should be rebuilt, or the new AC can be placed atop the existing PCC that has been cracked and seated. Table 11 summarizes pavement section options for Hart Avenue.

Table 11 – Hart Avenue Pavement Options

| Classification | AC (inches) | Aggregate Base (inches) | Subgrade |
|---|---|---|---|
| New Pavement Section | 5.5 | 2.5 | 18 inches stabilization rock over geotextile |
| | 5.5 | 7.0 | 12 inches of cement amended soil |
| New AC with Crack and Seat PCC | 5.0 | n/a | Crack and seat existing PCC. Install 20 inches of aggregate base if PCC not present. |

### *6.4.5 Metzler Avenue*

The existing pavement section at Metzler Avenue is in fair condition, though heterogeneous. The AC thickness ranges from 3.5 to 7.0 inches and is underlain by only 1.0 to 4.5 inches of aggregate base.

It is possible to grind and overlay the existing pavement, though some reflective cracking in the AC will likely occur in the future. Also, the civil designer will need to determine if there are conflicts with grades due to the increased thickness of overlay. Alternatively, the existing pavement can be removed and a new uniform section installed. Table 12 summarizes pavement section options for Metzler Avenue.

Table 12 – Metzler Avenue Pavement Options

| Classification | AC (inches) | Aggregate Base (inches) | Subgrade |
|---|---|---|---|
| New Pavement Section | 4.5 | 1.0 | 18 inches stabilization rock over geotextile |
| | 4.5 | 5.5 | 12 inches of cement amended soil |
| Grind and Overlay | 6.0 | n/a | Grind upper 1.5 inches of existing AC, and place new AC on *in situ* materials |

### *6.4.6 West 3rd Street*

West 3rd Street is unpaved with only 8 inches of gravel surfacing. It is possible to pave atop the existing aggregate base, though the civil designer will need to determine if there are conflicts with grades due to the overall increased pavement thickness. Alternatively, a full new pavement section can be installed. Table 13 summarizes pavement section options for West 3rd Street.

Table 13 – West 3rd Street Pavement Options

| Classification | AC (inches) | Aggregate Base (inches) | Subgrade |
|---|---|---|---|
| New Pavement Section | 4.5 | 5.0 | 14 inches stabilization rock over geotextile |
| | 4.5 | 5.5 | 12 inches of cement amended soil |
| AC over Existing Aggregate Base | 6.0 | n/a | *In situ* aggregate base and soil subgrade |

Note: The *AC over Existing aggregate base* option assumes that the existing aggregate base is firm and unyielding. If soft areas are encountered, then subgrade stabilization will be required.

## 6.5 Pavement Materials and Construction

### *6.5.1 AC*

The AC should consist of 1/2-inch dense-graded, PG 64-22 material meeting the specifications of OSSC 00744 – Asphalt Concrete Pavement. A Level 3 mix should be used for Molalla Avenue, while a Level 2 mix should be used for the other streets. The AC should be placed in lifts with minimum and maximum lift thickness of 2 and 3 inches, respectively, and be compacted to a minimum 92 percent of Rice Density of the mix, as determined in accordance with ASTM D 2041.

### *6.5.2 Aggregate Base*

Imported granular material used as aggregate base (base rock) beneath conventional AC pavement should meet the criteria specified in *Section 5.2 - Structural Fill and Backfill*. A subgrade geotextile shall be placed atop the soil subgrade before aggregate base is installed. However, a subgrade geotextile is not required atop a cement treated subgrade or stabilization material that is underlain by a subgrade geotextile.

### *6.5.3 AC Grinding*

Grinding of existing AC should be completed in conformance with OSSC 620 – Cold Plane Pavement Removal.

### *6.5.4 Crack-and-Seat PCC*

PCC underlies AC pavements along Molalla and Hart avenues. One pavement rehabilitation option is provided that allows the PCC to remain in place and an AC overlay to be installed. If this option is chosen, then the PCC will need to be prepared via the "crack-and-seat" methodology to help reduce the potential for future reflective cracking. Where existing PCC will be left in place, the panels shall be cut into pieces ranging from 1 to 3 feet in greatest dimension. Due to the soft, easily disturbed nature of the soil subgrade, "rubbilization" should not be attempted. The panels shall only be broken down by saw cutting, as dynamic action, such as hydraulic hammers, will also disturb the subgrade. After the slabs have been saw cut, they should be "seated" by several passes of an approximately 25- to 35-ton pneumatic (rubber-tired) roller.

## 7.0 CONSTRUCTION OBSERVATIONS

Satisfactory pavement and earthwork performance depends to a large degree on quality of construction. Sufficient monitoring of the contractor's activities is a key part of determining that the work is completed in accordance with the construction drawings and specifications. Subsurface conditions observed during construction should be compared with those encountered during subsurface explorations. Recognition of changed conditions often requires experience; therefore, Hart Crowser or their representative should visit the site with sufficient frequency to detect whether subsurface conditions change significantly from those anticipated.

We recommend that Hart Crowser be retained to monitor construction at the site to confirm that subsurface conditions are consistent with the site explorations and to confirm that the intent of project plans and specifications relating to earthwork and paving are being met. In particular, we recommend that stripping and subgrade preparation/stabilization, as well as placement and compaction of structural backfill, aggregate base, and asphalt pavement be observed and/or tested by Hart Crowser.

## 8.0 LIMITATIONS

We have prepared this report for the exclusive use of to HDJ Design Group, the City of Molalla, and their authorized agents for the proposed Molalla Urban Renewal project in Molalla, Oregon in accordance with our subconsultant agreement. Our report is intended to provide our opinion of geotechnical parameters for design and construction of the proposed project based on exploration locations that are believed to be representative of site conditions. However, conditions can vary significantly between exploration locations and our conclusions should not be construed as a warranty or guarantee of subsurface conditions or future site performance.

Within the limitations of scope, schedule, and budget, our services have been executed in accordance with generally accepted practices in the field of geotechnical engineering in this area at the time this report was prepared. No warranty, express or implied, should be understood.

Any electronic form, facsimile, or hard copy of the original document (email, text, table, and/or figure), if provided, and any attachments are only a copy of the original document. The original document is stored by Hart Crowser and will serve as the official document of record.

# 9.0 REFERENCES

American Association of State Highway and Transportation Officials (AASHTO) 2012. *AASHTO LRFD Bridge Design Specifications, 3rd* Edition, 2012.

AASHTO 1993. *AASHTO Guide for Design of Pavement Structures, 1993.*

Gerig, A.J. 1985. *Soil Survey of the Clackamas County Area, Oregon*, U.S. Department of Agriculture Soil Conservation Service, 293 pp., 66 plates.

Herbert Harper 1946. *Preliminary Report on the Geology of the Molalla Quadrangle, Oregon*.

Molalla 1997. *City of Molalla Public Works Design Standards, Section 6.0000 – Streets,* dated March 1997.

Occupational Safety and Health Administration (OSHA) Technical Manual Section V: Chapter 2, Excavations: Hazard Recognition in Trenching and Shoring: http://www.osha.gov/dts/osta/otm/otm_v/otm_v_2.html.

Oregon Department of Transportation (ODOT) 2015. *Oregon Standard Specifications for Construction (OSSC)*.

ODOT 2013. *ODOT Geotechnical Design Manual*.

ODOT 2011. *ODOT Pavement Design Guide.*

F:\Notebooks\1594907_Molalla Urban Renewal Road Improvements\Deliverables\Report-Molalla Ave-FINAL 10-19-15\Molalla_Hart_Shaver_3rd_Metzler_Geotech Rpt.docx

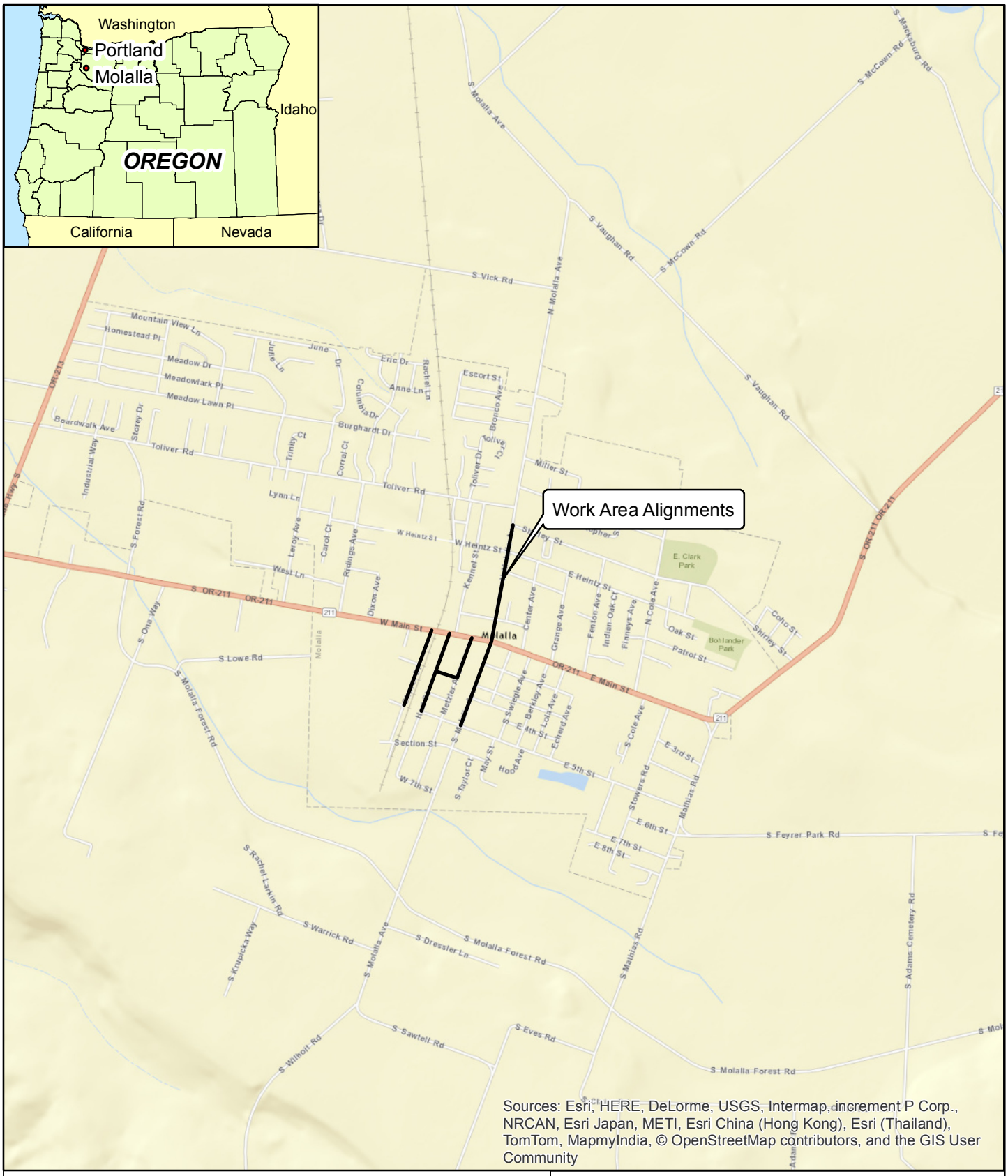


0 1,000 2,000 4,000 Feet

N

Molalla Urban Renewal Project
Molalla, Oregon

**Vicinity Map**

15949-07 10/15

HARTCROWSER

Figure
1

Document Path: \\Pdxsrv\data\Notebooks\1594907_Molalla Urban Renewal Road Improvements\GIS\1594907_VMap.mxd Date: 9/15/2015 User Name: melissaschweitzer

**LEGEND**

- ● Exploration
- **B** Boring
- **C** Core
- **DCP** Dynamic Cone Penetrometer

Note: Feature locations are approximate.

N

0 100 200 400 Feet

Molalla Urban Renewal Project
Molalla, Oregon

**Exploration Plan**
**Molalla Avenue**

15949-07 10/15

HARTCROWSER

Figure
**2A**

Document Path: F:\Notebooks\1594907_Molalla Urban Renewal Road Improvements\GIS\1594907_SP-Molalla.mxd Date: 9/15/2015 User Name: melissaschweitzer

**LEGEND**

- ● Exploration
- **B** Boring
- **C** Core
- **DCP** Dynamic Cone Penetrometer

Note: Feature locations are approximate.

N

0 50 100 200 Feet

Molalla Urban Renewal Project
Molalla, Oregon

**Exploration Plan**
**Shaver Avenue, Hart Avenue, W. 3rd Street, and Metzler Avenue**

15949-07 10/15

HARTCROWSER

Figure **2B**

Document Path: F:\Notebooks\1594907_Molalla Urban Renewal Road Improvements\GIS\1594907_SP-Shaver-Hart-Metzler.mxd Date: 9/16/2015 User Name: melissaschweitzer

# APPENDIX A
# Field Explorations

# APPENDIX A

## Field Explorations

This appendix documents the processes Hart Crowser used to determine the nature (and quality) of the soil and groundwater underlying the project site addressed by this report. The discussion includes information on the following subjects:

- Explorations and Their Locations,
- Pavement Cores,
- Borings, and
- DCP Testing.

### *Explorations and Their Locations*

A member of our engineering staff observed subsurface explorations for this project that included 25 pavement cores, 14 borings, and 25 DCP probes. The exploration logs in this appendix show our interpretation of the explorations, sampling, and testing data. The logs indicate the depths where the soils change. Note that soil changes may be gradual. In the field, we classified the samples taken from the explorations according to the methods presented on the Key to Exploration Logs. This key also provides a legend explaining the symbols and abbreviations used in the logs.

Figures 2A and 2B of the report show the locations of the explorations. Exploration locations were estimated in the field based on existing landmarks.

### *Pavement Cores*

Asphalt cores were obtained using a trailer-mounted drill rig operated by Dan Fischer Excavating of Forest Grove, Oregon. The asphalt concrete cores were collected and delivered to our laboratory. The core information is included in the main body of the report and photographs of the cores are presented in Appendix C.

### *Borings*

The borings were mechanically advanced using a solid-stem auger on a trailer-mounted drill rig operated by Dan Fischer Excavating. The drilling was continuously observed by geotechnical staff members from Hart Crowser, and detailed field logs of the borings were prepared. The logs are presented at the end of this appendix.

Samples were obtained from the borings using 1-1/2-inch-inner diameter split-spoon sampler (SPT sampler) in general accordance with guidelines presented in ASTM D 1586. The split-barrel sampler was driven into the soil with a 140-pound hammer free falling 30 inches. The sampler was driven a total distance of 18 inches. The number of blows required to drive the samplers the final 12 inches (the “N” value) is recorded on the boring logs, unless otherwise noted. All soil samples were placed into watertight bags and delivered to Hart Crowser's laboratory.

## *DCP Testing*

The DCP consists of a steel extension shaft assembly with a 60-degree hardened steel cone tip attached to one end, which is driven into the subgrade by means of a sliding dual mass hammer. Testing was conducted in accordance with ASTM D 6951/D 6951M-09. Testing provides an evaluation of in-place California Bearing Ratio (CBR) and resilient modulus values for soils underlying pavements and proposed pavements. DCP testing was conducted by a member of Hart Crowser's geotechnical engineering staff.

Plots of the resilient modulus values estimated by the DCP testing (using ODOT 2011 correlations) are included in Appendix C.

# KEY TO EXPLORATION LOGS

HARTCROWSER

## SOIL CLASSIFICATION CHART

| MATERIAL TYPES | MAJOR DIVISIONS | | GROUP SYMBOL | SOIL GROUP NAMES & LEGEND |
|---|---|---|---|---|
| COARSE-GRAINED SOILS >50% RETAINED ON NO. 200 SIEVE | GRAVELS >50% OF COARSE FRACTION RETAINED ON NO 4. SIEVE | CLEAN GRAVELS <5% FINES | GW | WELL-GRADED GRAVEL |
| | | | GP | POORLY-GRADED GRAVEL |
| | | GRAVELS WITH FINES, >12% FINES | GM | SILTY GRAVEL |
| | | | GC | CLAYEY GRAVEL |
| | SANDS >50% OF COARSE FRACTION PASSES ON NO 4. SIEVE | CLEAN SANDS <5% FINES | SW | WELL-GRADED SAND |
| | | | SP | POORLY-GRADED SAND |
| | | SANDS AND FINES >12% FINES | SM | SILTY SAND |
| | | | SC | CLAYEY SAND |
| FINE-GRAINED SOILS >50% PASSES NO. 200 SIEVE | SILTS AND CLAYS LIQUID LIMIT<50 | INORGANIC | CL | LEAN CLAY |
| | | | ML | SILT |
| | | ORGANIC | OL | ORGANIC CLAY OR SILT |
| | SILTS AND CLAYS LIQUID LIMIT>50 | INORGANIC | CH | FAT CLAY |
| | | | MH | ELASTIC SILT |
| | | ORGANIC | OH | ORGANIC CLAY OR SILT |
| HIGHLY ORGANIC SOILS | | | PT | PEAT |

Note: Multiple symbols are used to indicate borderline or dual classifications

### OTHER MATERIAL SYMBOLS

- Concrete
- Asphalt
- Topsoil

### MOISTURE MODIFIERS

- Dry - Absence of moisture, dusty, dry to the touch
- Moist - Damp, but no visible water
- Wet - Visible free water or saturated, usually soil is obtained from below the water table

### SEEPAGE MODIFIERS

- None -
- Slow - < 1 gpm
- Moderate - 1-3 gpm
- Heavy - > 3 gpm

### CAVING MODIFIERS

- None -
- Minor - isolated
- Moderate - frequent
- Severe - general

### MINOR CONSTITUENTS

- Trace - < 5% (silt/clay)
- Occasional - < 15% (sand/gravel)
- With - 5-15% (silt/clay) in sand or gravel; 15-30% (sand/gravel) in silt or clay

### SAMPLE TYPES

- Dames & Moore
- Standard Penetration Test (SPT)
- Shelby Tube
- Bulk or Grab

### LABORATORY/ FIELD TESTS

- ATT - Atterberg Limits
- CP - Laboratory Compaction Test
- CA - Chemical Analysis (Corrosivity)
- CN - Consolidation
- DD - Dry Density
- DS - Direct Shear
- HA - Hydrometer Analysis
- OC - Organic Content
- PP - Pocket Penetrometer (TSF)
- P200 - Percent Passing No. 200 Sieve
- SA - Sieve Analysis
- SW - Swell Test
- TV - Torvane Shear
- UC - Unconfined Compression

### GROUNDWATER SYMBOLS

- Water Level (at time of drilling)
- Water Level (at end of drilling)
- Water Level (after drilling)

### STRATIGRAPHIC CONTACT

- Distinct contact between soil strata or geologic units
- Gradual or approximate change between soil strata or geologic units

Notes:

Blowcount (N) is recorded for driven samplers as the number of blows required to advance sampler 12 inches (or distance noted) per ASTM D-1586. See exploration log for hammer weight and drop.

When the Dames & Moore (D&M) sampler was driven with a 140-pound hammer (denoted on logs as D+M 140), the field blow counts (N-value) shown on the logs have been reduced by 50% to approximate SPT N-values.

Soil density/consistency in borings is related primarily to the Standard Penetration Resistance. Soil density/consistency in test pits and probes is estimated based on visual observation and is presented parenthetically on the logs.

Refer to the report text and exploration logs for a proper understanding of subsurface conditions. Descriptions on the logs apply only at the exploration locations at the time the explorations were made. The logs are not warranted to be representative of the subsurface conditoins at other locations or times.

KEY TO EXPLORATION LOGS - F:\GINT\OREGON_LIBRARY.GLB - 6/3/15 09:52 - C:\USERS\MELISSASCHWEITZER\DESKTOP\1913200-TP.GPJ

*Figure A-1*

# Boring Log B-01

Location: Hart Avenue
Approximate Ground Surface Elevation: Feet
Horizontal Datum:
Vertical Datum:

Drill Equipment: Buck Rogers
Hammer Type: Solid Stem Auger
Hole Diameter: 4.5 inches
Logged By: J. Duquette Reviewed By: J. Alders

| USCS Class | Graphic Log | Soil Descriptions | Depth in Feet |
|---|---|---|---|
| | | Asphalt Concrete (5.8-inches thick) | 0 |
| GW | | Base Aggregate (7.3-inches thick) | |
| CL | | Soft to medium stiff, moist, gray LEAN CLAY. | |
| GM | | Very dense, dry, gray and brown, silty GRAVEL. | |
| | | Bottom of Boring at 5.0 Feet. Started 04/02/15. Completed 04/02/15. | 5 |
| | | | 10 |

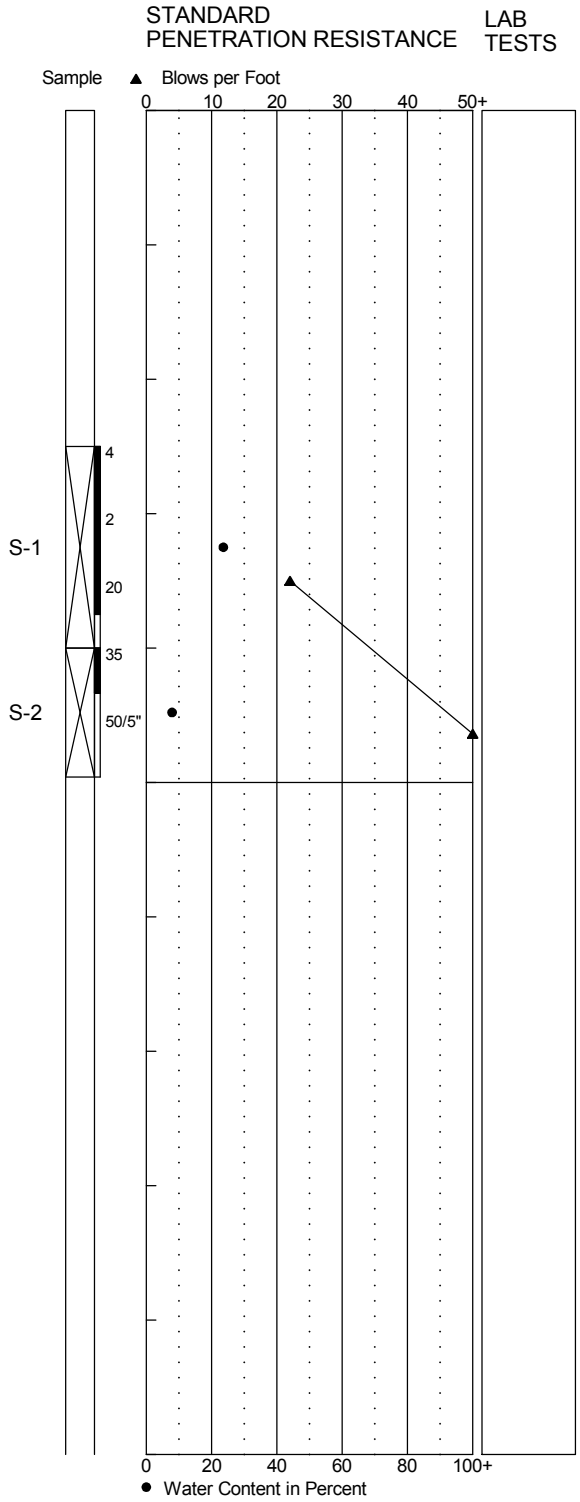


1. Refer to Figure A-1 for explanation of descriptions and symbols.
2. Soil descriptions and stratum lines are interpretive and actual changes may be gradual.
3. USCS designations are based on visual manual classification (ASTM D 2488) unless otherwise supported by laboratory testing (ASTM D 2487).
4. Groundwater level, if indicated, is at time of drilling (ATD) or for date specified. Level may vary with time.

HARTCROWSER

15949-07 10/15

Figure A-2

NEW BORING LOG - F:\GINT\OREGON_LIBRARY.GLB - 9/16/15 15:03 - F:\NOTEBOOKS\1594907_MOLALLA URBAN RENEWAL ROAD IMPROVEMENTS\FIELD DATA\PERM_GINT\1594907-ALLEXPLORATIONS.GPJ

# Boring Log B-02

Location: Hart Avenue
Approximate Ground Surface Elevation: Feet
Horizontal Datum:
Vertical Datum:

Drill Equipment: Buck Rogers
Hammer Type: Solid Stem Auger
Hole Diameter: 4.5 inches
Logged By: J. Duquette Reviewed By: J. Alders

| USCS Class | Graphic Log | Soil Descriptions | Depth in Feet |
|---|---|---|---|
| | | Asphalt Concrete (3.3-inches thick) | 0 |
| | | Portland Cement Concrete (9.9-inches thick) | |
| CL | | Medium stiff to stiff, moist, brown, silty LEAN CLAY with gravel. | |
| GM | | Medium dense, moist, brown, silty GRAVEL with sand. | 5 |
| | | Bottom of Boring at 6.5 Feet.<br>Started 04/02/15.<br>Completed 04/02/15. | 10 |

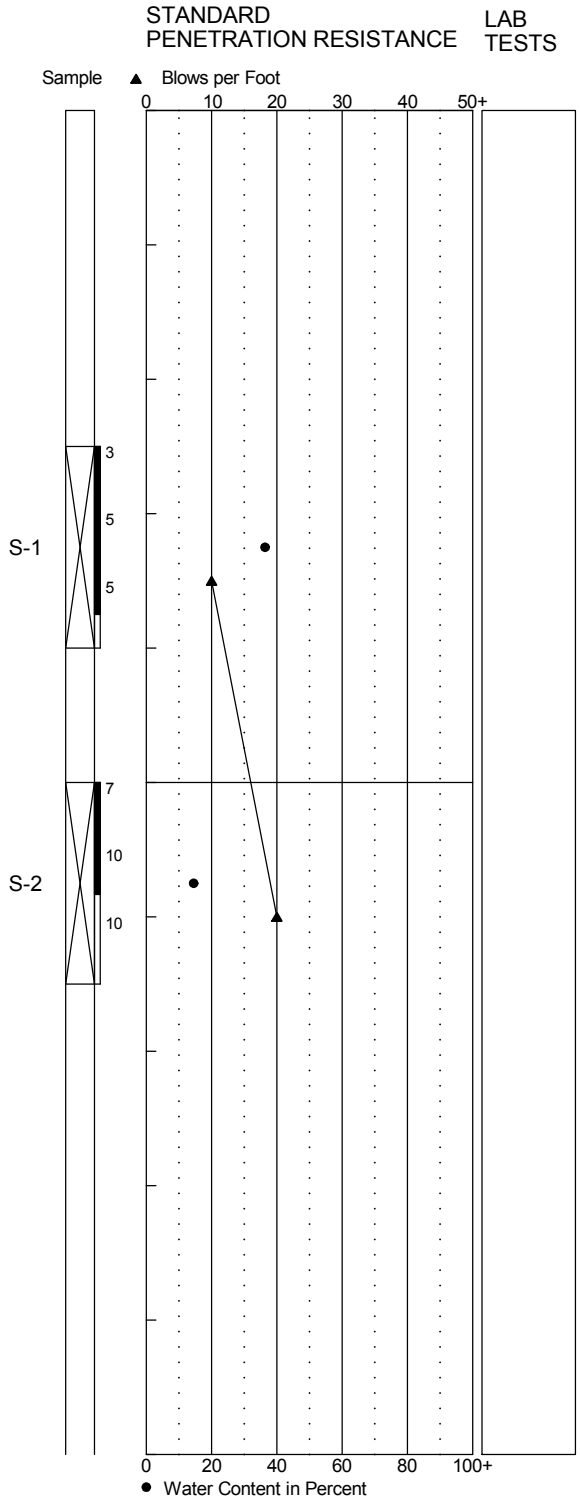


1. Refer to Figure A-1 for explanation of descriptions and symbols.
2. Soil descriptions and stratum lines are interpretive and actual changes may be gradual.
3. USCS designations are based on visual manual classification (ASTM D 2488) unless otherwise supported by laboratory testing (ASTM D 2487).
4. Groundwater level, if indicated, is at time of drilling (ATD) or for date specified. Level may vary with time.

HARTCROWSER

15949-07 10/15

Figure A-3

NEW BORING LOG - F:\GINT\OREGON_LIBRARY.GLB - 9/16/15 15:03 - F:\NOTEBOOKS\1594907_MOLALLA URBAN RENEWAL ROAD IMPROVEMENTS\FIELD DATA\PERM_GINT\1594907-ALLEXPLORATIONS.GPJ

# Boring Log B-03

Location: 3rd Street
Approximate Ground Surface Elevation: Feet
Horizontal Datum:
Vertical Datum:

Drill Equipment: Buck Rogers
Hammer Type: Solid Stem Auger
Hole Diameter: 4.5 inches
Logged By: J. Duquette Reviewed By: J. Alders

| USCS Class | Graphic Log | Soil Descriptions | Depth in Feet |
|---|---|---|---|
| GW | | Base Aggregate (8-inches thick) | 0 |
| CL | | Medium stiff to very stiff, moist, brown, silty LEAN CLAY with occasional gravel. | |
| GC | | Medium dense, dry, brown, clayey GRAVEL. | 5 |
| | | Bottom of Boring at 5.5 Feet.<br>Started 04/02/15.<br>Completed 04/02/15. | 10 |

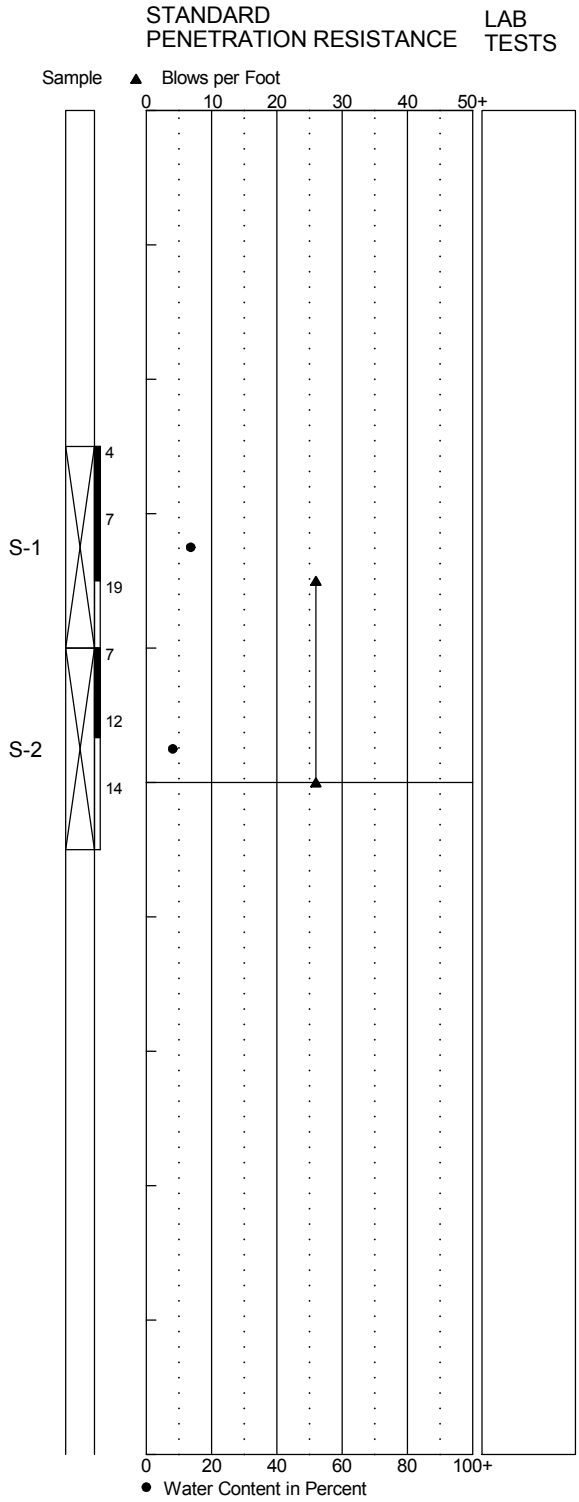


1. Refer to Figure A-1 for explanation of descriptions and symbols.
2. Soil descriptions and stratum lines are interpretive and actual changes may be gradual.
3. USCS designations are based on visual manual classification (ASTM D 2488) unless otherwise supported by laboratory testing (ASTM D 2487).
4. Groundwater level, if indicated, is at time of drilling (ATD) or for date specified. Level may vary with time.

HARTCROWSER

15949-07 10/15

Figure A-4

NEW BORING LOG - F:\GINT\OREGON_LIBRARY.GLB - 9/16/15 15:03 - F:\NOTEBOOKS\1594907_MOLALLA URBAN RENEWAL ROAD IMPROVEMENTS\FIELD DATA\PERM_GINT\1594907-ALLEXPLORATIONS.GPJ

# Boring Log B-04

Location: 3rd Street
Approximate Ground Surface Elevation: Feet
Horizontal Datum:
Vertical Datum:

Drill Equipment: Buck Rogers
Hammer Type: Solid Stem Auger
Hole Diameter: 4.5 inches
Logged By: J. Duquette Reviewed By: J. Alders

| USCS Class | Graphic Log | Soil Descriptions | Depth in Feet |
|---|---|---|---|
| GW | | Base Aggregate (8.5-inches thick) | 0 |
| CL | | Soft to stiff, moist, brown, silty LEAN CLAY with gravel. | |
| | | grades to very stiff, occasional gravel | 5 |
| | | Bottom of Boring at 6.5 Feet. Started 04/02/15. Completed 04/02/15. | 10 |

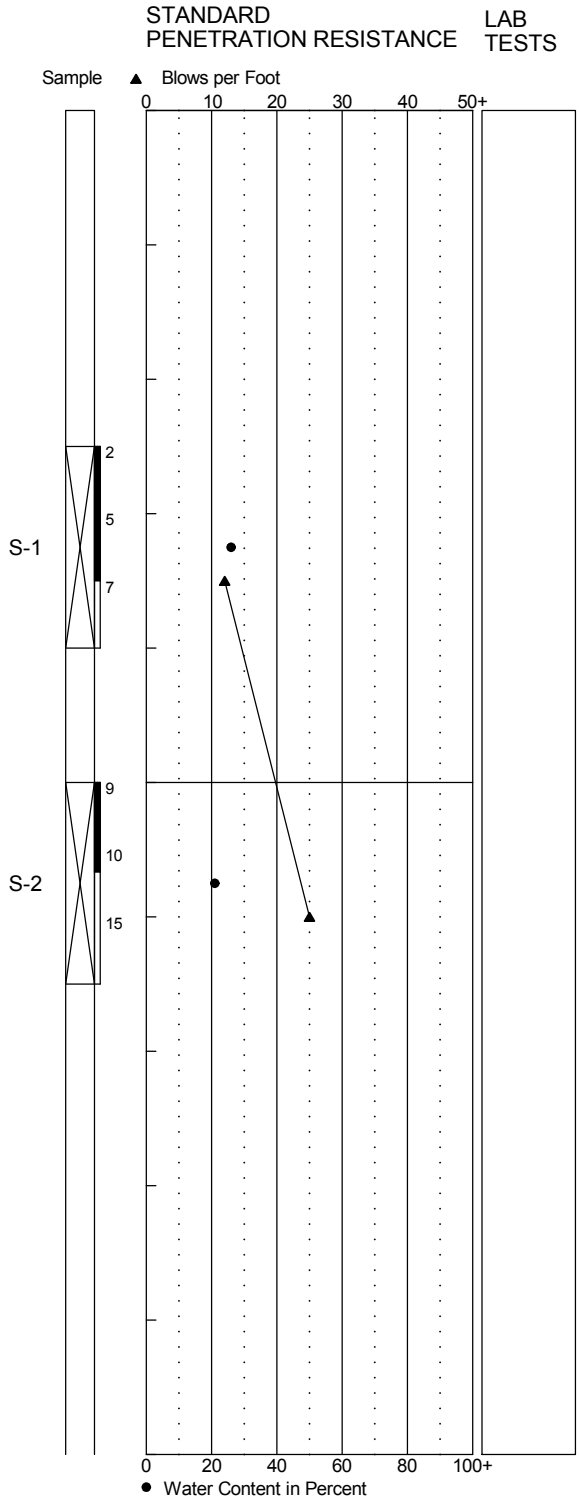


1. Refer to Figure A-1 for explanation of descriptions and symbols.
2. Soil descriptions and stratum lines are interpretive and actual changes may be gradual.
3. USCS designations are based on visual manual classification (ASTM D 2488) unless otherwise supported by laboratory testing (ASTM D 2487).
4. Groundwater level, if indicated, is at time of drilling (ATD) or for date specified. Level may vary with time.

HARTCROWSER

15949-07 10/15

Figure A-5

NEW BORING LOG - F:\GINT\OREGON_LIBRARY.GLB - 9/16/15 15:03 - F:\NOTEBOOKS\1594907_MOLALLA URBAN RENEWAL ROAD IMPROVEMENTS\FIELD DATA\PERM_GINT\1594907-ALLEXPLORATIONS.GPJ

# Boring Log B-05

Location: Metzler Avenue
Approximate Ground Surface Elevation: Feet
Horizontal Datum:
Vertical Datum:

Drill Equipment: Buck Rogers
Hammer Type: Solid Stem Auger
Hole Diameter: 4.5 inches
Logged By: J. Duquette Reviewed By: J. Alders

| USCS Class | Graphic Log | Soil Descriptions | Depth in Feet |
|---|---|---|---|
| | | Asphalt Concrete (3.5-inches thick) | 0 |
| GW | | Base Aggregate (4.5-inches thick) | |
| CL | | Stiff, moist, brown, silty LEAN CLAY with occasional sand and gravel. | |
| | | 6-inch-thick clayey gravel lense | |
| | | grades to very stiff CLAY with gravel | 5 |
| GC | | Very dense, moist, brown, clayey GRAVEL. | |
| | | Bottom of Boring at 6.5 Feet. Started 04/02/15. Completed 04/02/15. | 10 |

STANDARD PENETRATION RESISTANCE

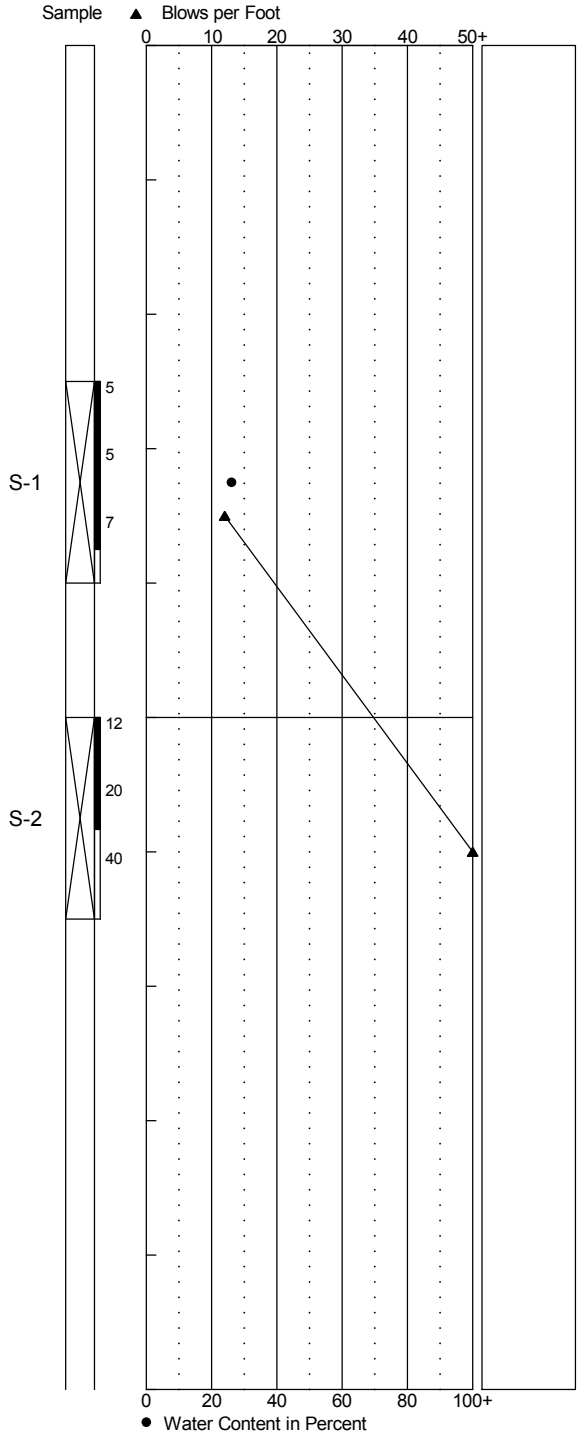


LAB TESTS

1. Refer to Figure A-1 for explanation of descriptions and symbols.
2. Soil descriptions and stratum lines are interpretive and actual changes may be gradual.
3. USCS designations are based on visual manual classification (ASTM D 2488) unless otherwise supported by laboratory testing (ASTM D 2487).
4. Groundwater level, if indicated, is at time of drilling (ATD) or for date specified. Level may vary with time.

HARTCROWSER

15949-07 10/15

Figure A-6

NEW BORING LOG - F:\GINT\OREGON_LIBRARY.GLB - 9/16/15 15:03 - F:\NOTEBOOKS\1594907_MOLALLA URBAN RENEWAL ROAD IMPROVEMENTS\FIELD DATA\PERM_GINT\1594907-ALLEXPLORATIONS.GPJ

# Boring Log B-06

Location: Metzler Avenue
Approximate Ground Surface Elevation: Feet
Horizontal Datum:
Vertical Datum:

Drill Equipment: Buck Rogers
Hammer Type: Solid Stem Auger
Hole Diameter: 4.5 inches
Logged By: J. Duquette Reviewed By: J. Alders

| USCS Class | Graphic Log | Soil Descriptions | Depth in Feet |
|---|---|---|---|
| | | Asphalt Concrete (4-inches thick) | 0 |
| GW | | Base Aggregate (1.5-inches thick) | |
| CL | | Stiff to hard, moist, brown, silty LEAN CLAY with occasional gravel. | |
| | | 6-inch-thick clayey gravel lense | 5 |
| | | Bottom of Boring at 5.5 Feet. Started 04/02/15. Completed 04/02/15. | 10 |

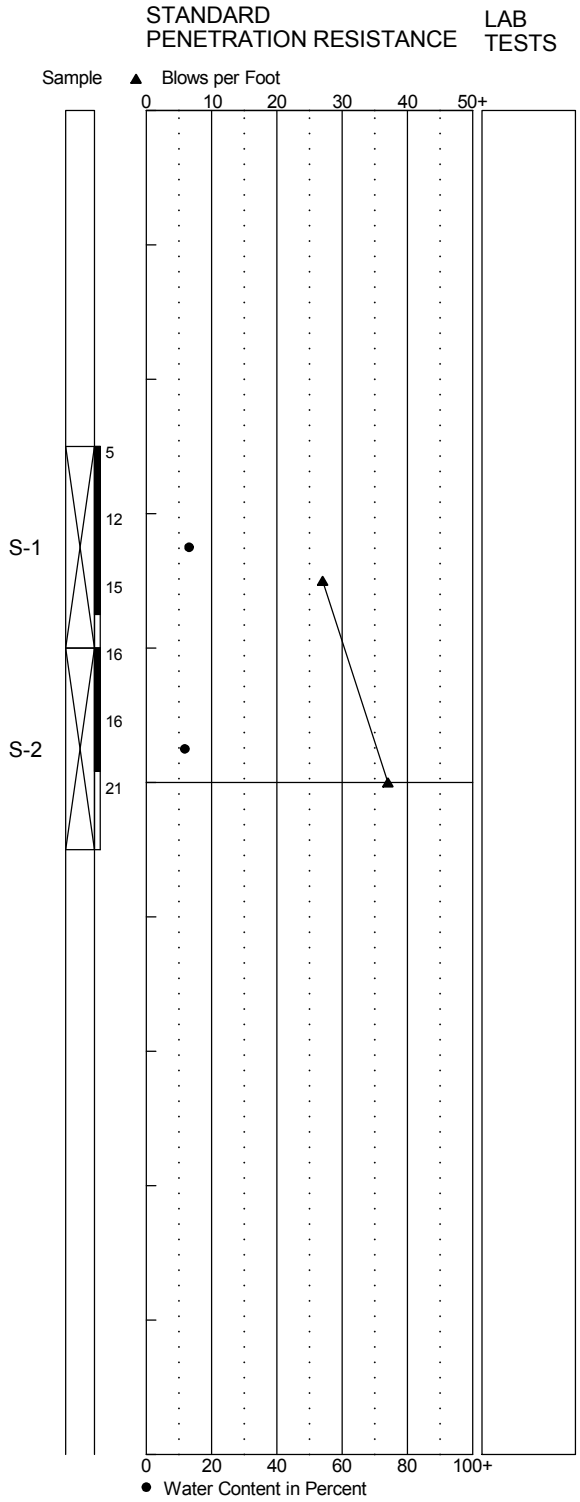


1. Refer to Figure A-1 for explanation of descriptions and symbols.
2. Soil descriptions and stratum lines are interpretive and actual changes may be gradual.
3. USCS designations are based on visual manual classification (ASTM D 2488) unless otherwise supported by laboratory testing (ASTM D 2487).
4. Groundwater level, if indicated, is at time of drilling (ATD) or for date specified. Level may vary with time.

HARTCROWSER

15949-07 10/15

Figure A-7

NEW BORING LOG - F:\GINT\OREGON_LIBRARY.GLB - 9/16/15 15:03 - F:\NOTEBOOKS\1594907_MOLALLA URBAN RENEWAL ROAD IMPROVEMENTS\FIELD DATA\PERM_GINT\1594907-ALLEXPLORATIONS.GPJ

# Boring Log B-07

Location: South Molalla Avenue
Approximate Ground Surface Elevation: Feet
Horizontal Datum:
Vertical Datum:

Drill Equipment: Buck Rogers
Hammer Type: Solid Stem Auger
Hole Diameter: 4.5 inches
Logged By: J. Duquette Reviewed By: J. Alders

| USCS Class | Graphic Log | Soil Descriptions | Depth in Feet |
|---|---|---|---|
| | | Asphalt Concrete (7.3-inches thick) | 0 |
| | | Portland Cement Concrete (6.7-inches thick) | |
| CL | | Medium stiff, moist, dark brown, silty LEAN CLAY with gravel. | |
| GC | | Dense, wet, brown, clayey GRAVEL with sand. | 5 |
| | | Bottom of Boring at 6.5 Feet.<br>Started 04/02/15.<br>Completed 04/02/15. | 10 |

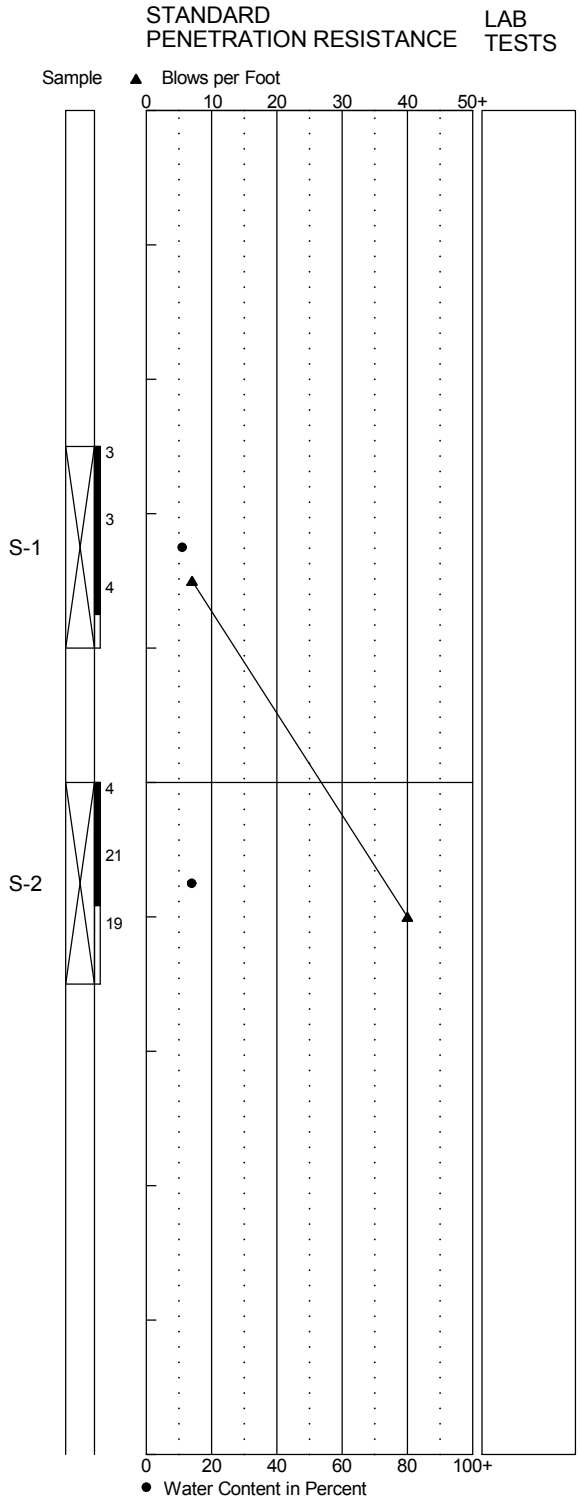


1. Refer to Figure A-1 for explanation of descriptions and symbols.
2. Soil descriptions and stratum lines are interpretive and actual changes may be gradual.
3. USCS designations are based on visual manual classification (ASTM D 2488) unless otherwise supported by laboratory testing (ASTM D 2487).
4. Groundwater level, if indicated, is at time of drilling (ATD) or for date specified. Level may vary with time.

HARTCROWSER

15949-07 10/15

Figure A-8

NEW BORING LOG - F:\GINT\OREGON_LIBRARY.GLB - 9/16/15 15:03 - F:\NOTEBOOKS\1594907_MOLALLA URBAN RENEWAL ROAD IMPROVEMENTS\FIELD DATA\PERM_GINT\1594907-ALLEXPLORATIONS.GPJ

# Boring Log B-08

Location: North Molalla Avenue
Approximate Ground Surface Elevation: Feet
Horizontal Datum:
Vertical Datum:

Drill Equipment: Buck Rogers
Hammer Type: Solid Stem Auger
Hole Diameter: 4.5 inches
Logged By: J. Duquette Reviewed By: J. Alders

| USCS Class | Graphic Log | Soil Descriptions | Depth in Feet |
|---|---|---|---|
| | | Asphalt Concrete (3.5-inches thick) | 0 |
| | | Portland Cement Concrete (6.1-inches thick) | |
| CH | | Soft to medium stiff, moist, brown, FAT CLAY. | |
| | | grades to very stiff, gravelly | |
| GC | | Very dense, moist, brown, clayey GRAVEL. | |
| | | Bottom of Boring at 4.9 Feet. Started 04/02/15. Completed 04/02/15. | 5 |
| | | | 10 |

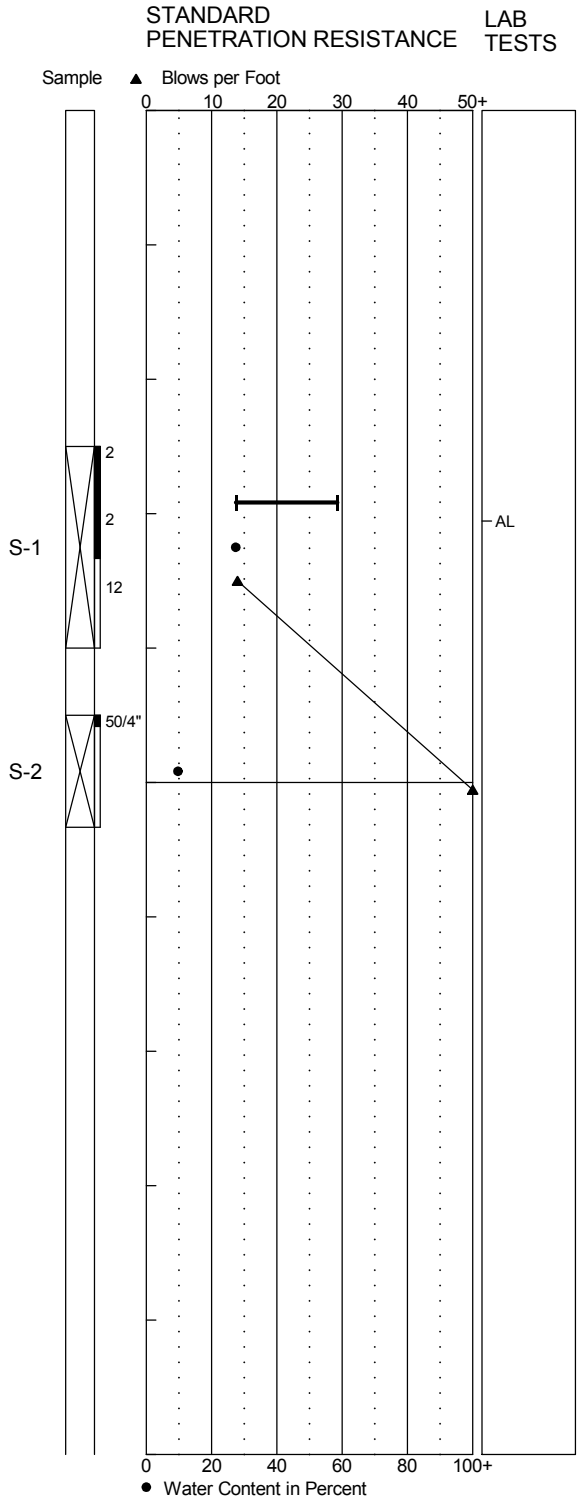


1. Refer to Figure A-1 for explanation of descriptions and symbols.
2. Soil descriptions and stratum lines are interpretive and actual changes may be gradual.
3. USCS designations are based on visual manual classification (ASTM D 2488) unless otherwise supported by laboratory testing (ASTM D 2487).
4. Groundwater level, if indicated, is at time of drilling (ATD) or for date specified. Level may vary with time.

HARTCROWSER

15949-07 10/15

Figure A-9

NEW BORING LOG - F:\GINT\OREGON_LIBRARY.GLB - 9/16/15 15:03 - F:\NOTEBOOKS\1594907_MOLALLA URBAN RENEWAL ROAD IMPROVEMENTS\FIELD DATA\PERM_GINT\1594907-ALLEXPLORATIONS.GPJ

# Boring Log B-09

Location: South Molalla Avenue
Approximate Ground Surface Elevation: Feet
Horizontal Datum:
Vertical Datum:

Drill Equipment: Buck Rogers
Hammer Type: Solid Stem Auger
Hole Diameter: 4.5 inches
Logged By: J. Duquette Reviewed By: J. Alders

| USCS Class | Graphic Log | Soil Descriptions | Depth in Feet |
|---|---|---|---|
| | | Asphalt Concrete (3.8-inches thick) | 0 |
| | | Portland Cement Concrete (5.5-inches thick) | |
| CL | | Soft to medium stiff, moist, brown, LEAN CLAY. | |
| | | grades to very stiff, gravelly | |
| GC | | Very dense, moist, brown, clayey GRAVEL. | 5 |
| | | Bottom of Boring at 5.9 Feet.<br>Started 04/02/15.<br>Completed 04/02/15. | 10 |

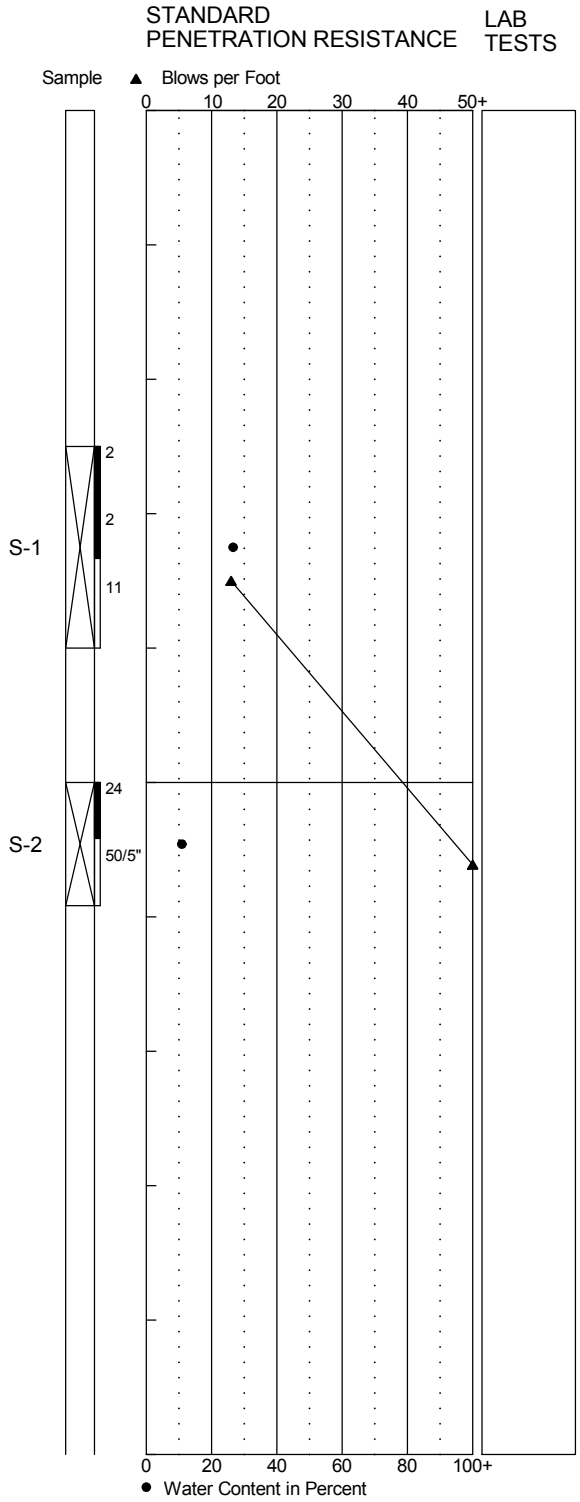


1. Refer to Figure A-1 for explanation of descriptions and symbols.
2. Soil descriptions and stratum lines are interpretive and actual changes may be gradual.
3. USCS designations are based on visual manual classification (ASTM D 2488) unless otherwise supported by laboratory testing (ASTM D 2487).
4. Groundwater level, if indicated, is at time of drilling (ATD) or for date specified. Level may vary with time.

HARTCROWSER

15949-07 10/15

Figure A-10

NEW BORING LOG - F:\GINT\OREGON_LIBRARY.GLB - 9/16/15 15:03 - F:\NOTEBOOKS\1594907_MOLALLA URBAN RENEWAL ROAD IMPROVEMENTS\FIELD DATA\PERM_GINT\1594907-ALLEXPLORATIONS.GPJ

# Boring Log B-10

Location: South Molalla Avenue
Approximate Ground Surface Elevation: Feet
Horizontal Datum:
Vertical Datum:

Drill Equipment: Buck Rogers
Hammer Type: Solid Stem Auger
Hole Diameter: 4.5 inches
Logged By: J. Duquette Reviewed By: J. Alders

| USCS Class | Graphic Log | Soil Descriptions | Depth in Feet |
|---|---|---|---|
| | | Asphalt Concrete (4.1-inches thick) | 0 |
| | | Portland Cement Concrete (5.4-inches thick) | |
| CL | | Medium stiff to stiff, moist, brown LEAN CLAY. | |
| | | grades to very stiff, sandy with gravel | 5 |
| | | Bottom of Boring at 6.5 Feet.<br>Started 04/02/15.<br>Completed 04/02/15. | 10 |

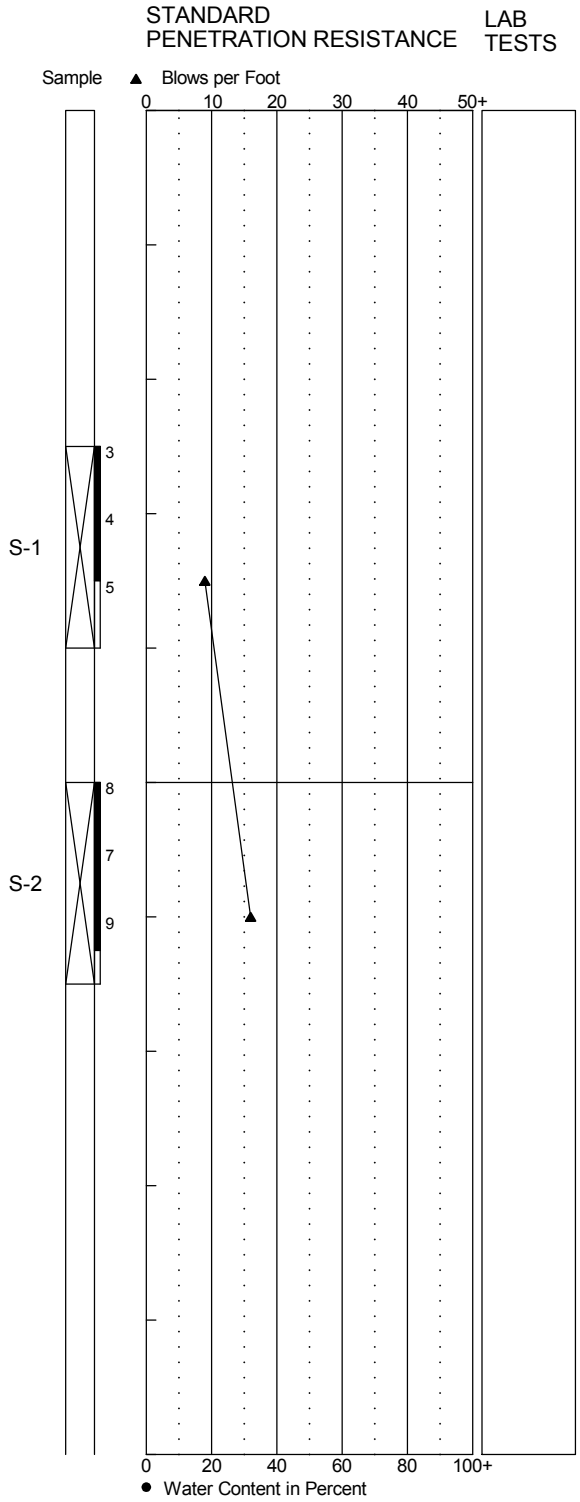


1. Refer to Figure A-1 for explanation of descriptions and symbols.
2. Soil descriptions and stratum lines are interpretive and actual changes may be gradual.
3. USCS designations are based on visual manual classification (ASTM D 2488) unless otherwise supported by laboratory testing (ASTM D 2487).
4. Groundwater level, if indicated, is at time of drilling (ATD) or for date specified. Level may vary with time.

HARTCROWSER

15949-07 10/15

Figure A-11

NEW BORING LOG - F:\GINT\OREGON_LIBRARY.GLB - 9/16/15 15:03 - F:\NOTEBOOKS\1594907_MOLALLA URBAN RENEWAL ROAD IMPROVEMENTS\FIELD DATA\PERM_GINT\1594907-ALLEXPLORATIONS.GPJ

# Boring Log B-11

Location: North Molalla Avenue
Approximate Ground Surface Elevation: Feet
Horizontal Datum:
Vertical Datum:

Drill Equipment: Buck Rogers
Hammer Type: Solid Stem Auger
Hole Diameter: 4.5 inches
Logged By: J. Duquette Reviewed By: J. Alders

| USCS Class | Graphic Log | Soil Descriptions | Depth in Feet |
|---|---|---|---|
| | | Asphalt Concrete (3.8-inches thick) | 0 |
| | | Portland Cement Concrete (6.1-inches thick) | |
| CH | | Medium stiff to very stiff, dry, brown, FAT CLAY with occasional gravel. | |
| GC | | Very dense, dry, brown, clayey GRAVEL. | |
| | | Bottom of Boring at 4.9 Feet. Started 04/02/15. Completed 04/02/15. | 5 |
| | | | 10 |

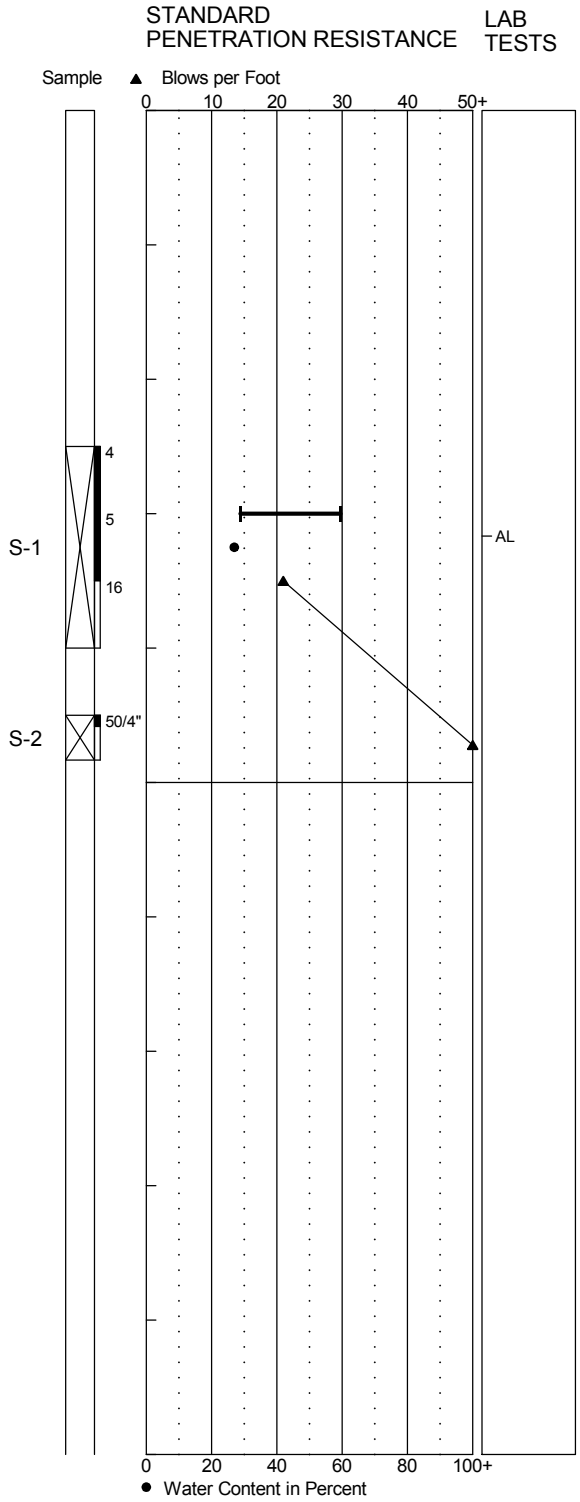


1. Refer to Figure A-1 for explanation of descriptions and symbols.
2. Soil descriptions and stratum lines are interpretive and actual changes may be gradual.
3. USCS designations are based on visual manual classification (ASTM D 2488) unless otherwise supported by laboratory testing (ASTM D 2487).
4. Groundwater level, if indicated, is at time of drilling (ATD) or for date specified. Level may vary with time.

HARTCROWSER

15949-07 10/15

Figure A-12

NEW BORING LOG - F:\GINT\OREGON_LIBRARY.GLB - 9/16/15 15:03 - F:\NOTEBOOKS\1594907_MOLALLA URBAN RENEWAL ROAD IMPROVEMENTS\FIELD DATA\PERM_GINT\1594907-ALLEXPLORATIONS.GPJ

# Boring Log B-12

Location: North Molalla Avenue
Approximate Ground Surface Elevation: Feet
Horizontal Datum:
Vertical Datum:

Drill Equipment: Buck Rogers
Hammer Type: Solid Stem Auger
Hole Diameter: 4.5 inches
Logged By: J. Duquette Reviewed By: J. Alders

| USCS Class | Graphic Log | Soil Descriptions | Depth in Feet |
|---|---|---|---|
| | | Asphalt Concrete (3.9-inches thick) | 0 |
| | | Portland Cement Concrete (6.6-inches thick) | |
| GW | | Base Aggregate (2-inches thick) | |
| CL | | Soft to medium stiff, dry, brown, LEAN CLAY with occasional gravel. | |
| GC | | Very dense, moist, brown, clayey GRAVEL | 5 |
| | | Bottom of Boring at 5.9 Feet. Started 04/02/15. Completed 04/02/15. | 10 |

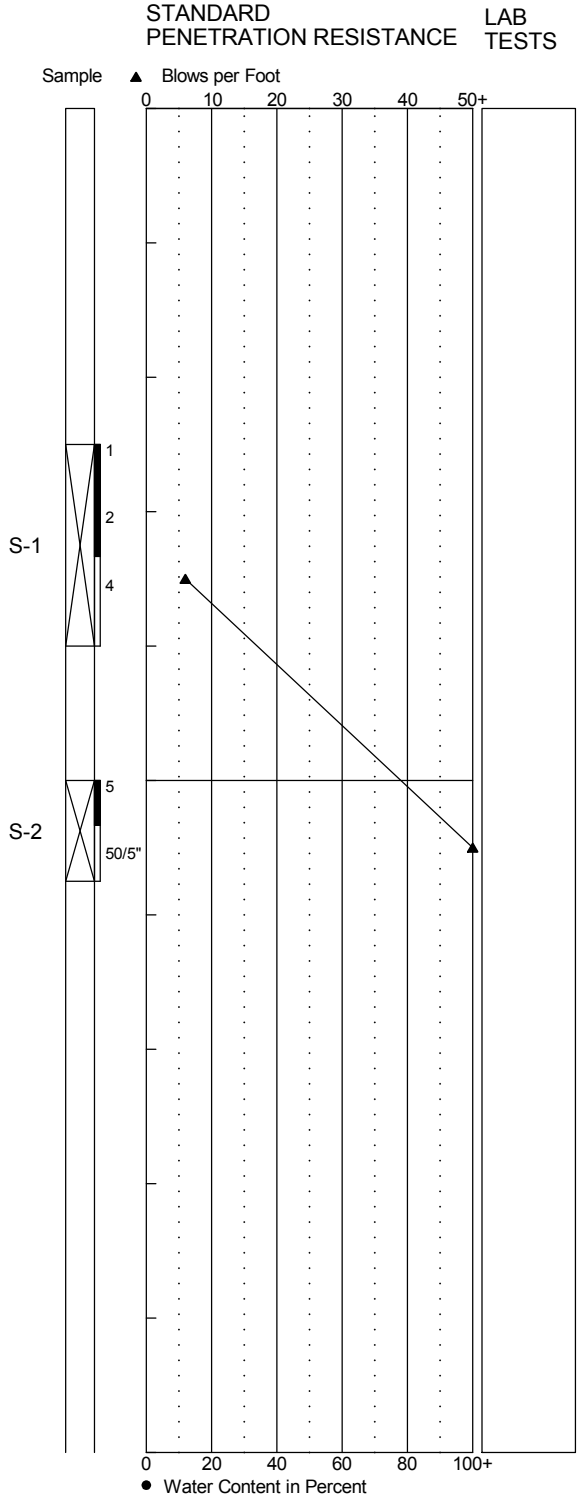


1. Refer to Figure A-1 for explanation of descriptions and symbols.
2. Soil descriptions and stratum lines are interpretive and actual changes may be gradual.
3. USCS designations are based on visual manual classification (ASTM D 2488) unless otherwise supported by laboratory testing (ASTM D 2487).
4. Groundwater level, if indicated, is at time of drilling (ATD) or for date specified. Level may vary with time.

HARTCROWSER

15949-07 10/15

Figure A-13

NEW BORING LOG - F:\GINT\OREGON_LIBRARY.GLB - 9/16/15 15:03 - F:\NOTEBOOKS\1594907_MOLALLA URBAN RENEWAL ROAD IMPROVEMENTS\FIELD DATA\PERM_GINT\1594907-ALLEXPLORATIONS.GPJ

# Boring Log B-13

Location: Shaver Avenue
Approximate Ground Surface Elevation: Feet
Horizontal Datum:
Vertical Datum:

Drill Equipment: Buck Rogers
Hammer Type: Solid Stem Auger
Hole Diameter: 4.5 inches
Logged By: J. Duquette Reviewed By: J. Alders

| USCS Class | Graphic Log | Soil Descriptions | Depth in Feet |
|---|---|---|---|
| | | Asphalt Concrete (4.4-inches thick) | 0 |
| GW | | Base Aggregate (20-inches thick) | |
| CL | | Soft to medium stiff, moist, dark brown, LEAN CLAY. | |
| GC | | Dense, dry, brown, clayey GRAVEL. | 5 |
| | | Bottom of Boring at 6.5 Feet. Started 04/02/15. Completed 04/02/15. | 10 |

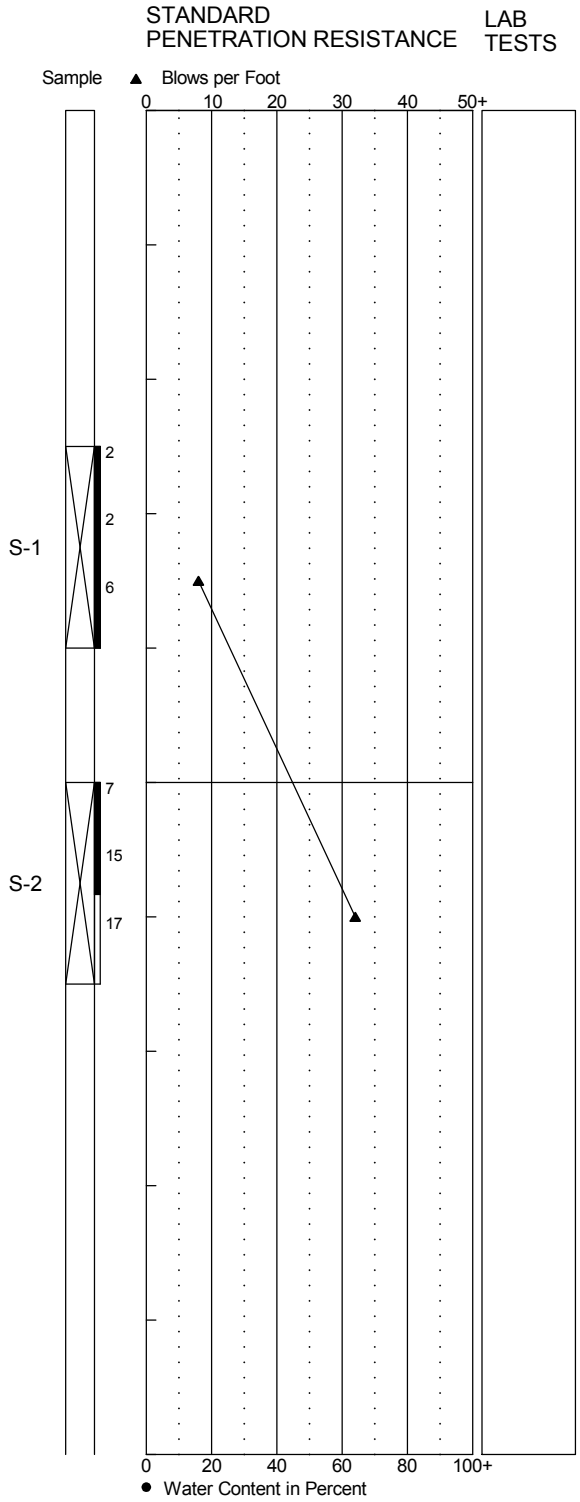


1. Refer to Figure A-1 for explanation of descriptions and symbols.
2. Soil descriptions and stratum lines are interpretive and actual changes may be gradual.
3. USCS designations are based on visual manual classification (ASTM D 2488) unless otherwise supported by laboratory testing (ASTM D 2487).
4. Groundwater level, if indicated, is at time of drilling (ATD) or for date specified. Level may vary with time.

HARTCROWSER

15949-07 10/15

Figure A-14

NEW BORING LOG - F:\GINT\OREGON_LIBRARY.GLB - 9/16/15 15:03 - F:\NOTEBOOKS\1594907_MOLALLA URBAN RENEWAL ROAD IMPROVEMENTS\FIELD DATA\PERM_GINT\1594907-ALLEXPLORATIONS.GPJ

# Boring Log B-14

Location: Shaver Avenue
Approximate Ground Surface Elevation: Feet
Horizontal Datum:
Vertical Datum:

Drill Equipment: Buck Rogers
Hammer Type: Solid Stem Auger
Hole Diameter: 4.5 inches
Logged By: J. Duquette Reviewed By: J. Alders

| USCS Class | Graphic Log | Soil Descriptions | Depth in Feet |
|---|---|---|---|
| | | Asphalt Concrete (4.5-inches thick) | 0 |
| GW | | Base Aggregate (13.5-inches thick) | |
| CL | | Stiff, moist, brown, silty LEAN CLAY. | |
| | | grades to gravelly | 5 |
| | | Bottom of Boring at 6.5 Feet. Started 04/02/15. Completed 04/02/15. | 10 |

STANDARD PENETRATION RESISTANCE

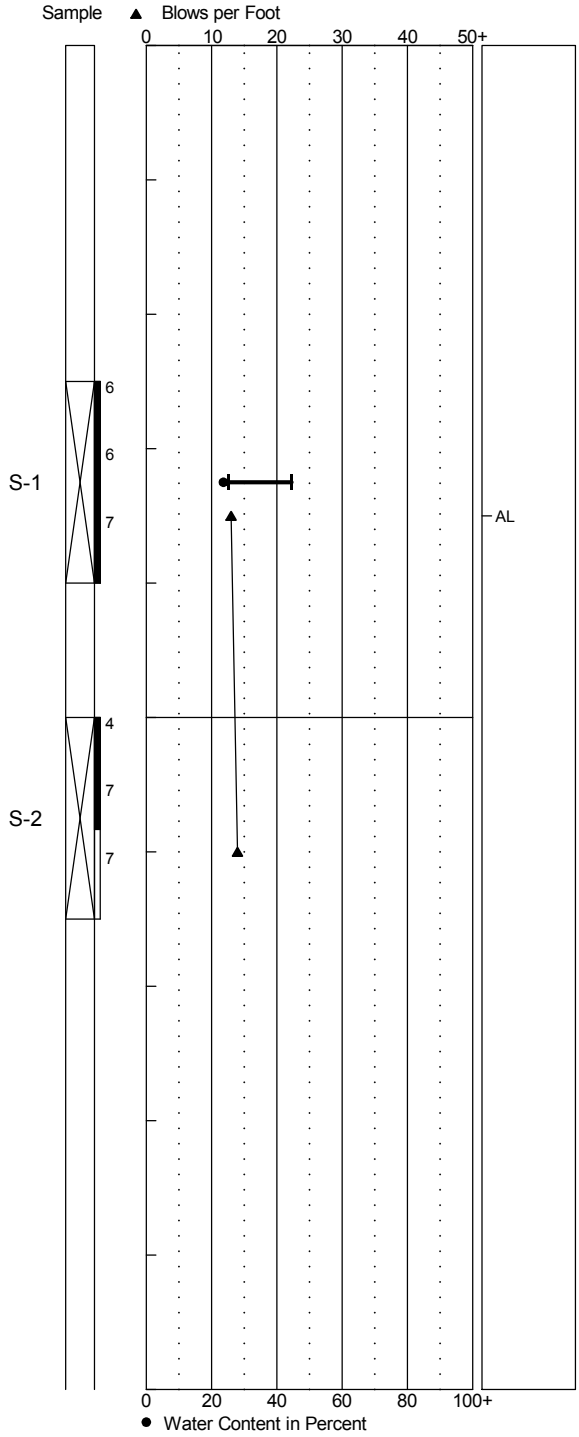


LAB TESTS

1. Refer to Figure A-1 for explanation of descriptions and symbols.
2. Soil descriptions and stratum lines are interpretive and actual changes may be gradual.
3. USCS designations are based on visual manual classification (ASTM D 2488) unless otherwise supported by laboratory testing (ASTM D 2487).
4. Groundwater level, if indicated, is at time of drilling (ATD) or for date specified. Level may vary with time.

HARTCROWSER

15949-07 10/15

Figure A-15

NEW BORING LOG - F:\GINT\OREGON_LIBRARY.GLB - 9/16/15 15:03 - F:\NOTEBOOKS\1594907_MOLALLA URBAN RENEWAL ROAD IMPROVEMENTS\FIELD DATA\PERM_GINT\1594907-ALLEXPLORATIONS.GPJ

# APPENDIX B
# Laboratory Testing

# APPENDIX B

## Laboratory Testing

A geotechnical laboratory testing program was performed for this study to evaluate the basic index and geotechnical engineering properties of the site soils. Testing was completed at our in-house laboratory in our Beaverton, Oregon office. The tests performed and the procedures followed are outlined below.

### *Soil Classification*

Soil samples were visually classified in our laboratory to verify the field classifications in a relatively controlled laboratory environment. Classifications were made in general accordance with the Unified Soil Classification System (USCS) and ASTM Test Method D 2487.

### *Water Content Determinations*

Water contents were determined for select samples recovered in the explorations in general accordance with ASTM Test Method D 2216. The test results are shown on the appropriate exploration logs included in Appendix A and shown on Figure B-1 in this appendix.

### *Atterberg Limits*

Atterberg Limits (liquid limit, plastic limit and plasticity index) of select fine-grained soil samples were obtained in general accordance with ASTM Test Method D 4318-02. The test results are shown on Figure B-2 in this appendix.

# SUMMARY OF LABORATORY RESULTS



HARTCROWSER

**CLIENT** HDJ Design Group/City of Molalla **PROJECT NAME** Molalla Urban Renewal Project

**PROJECT NUMBER** 15949-07 **PROJECT LOCATION** Heintz Road

| Borehole | Depth | Liquid Limit | Plastic Limit | Plasticity Index | Maximum Size (mm) | %<#200 Sieve | Class-ification | Water Content (%) | Dry Density (pcf) | Remarks |
|---|---|---|---|---|---|---|---|---|---|---|
| B-01 | 2.5 | | | | | | | 23.6 | | |
| B-01 | 4.0 | | | | | | | 7.9 | | |
| B-02 | 2.5 | | | | | | | 36.4 | | |
| B-02 | 5.0 | | | | | | | 14.5 | | |
| B-03 | 2.5 | | | | | | | 13.6 | | |
| B-03 | 4.0 | | | | | | | 8.1 | | |
| B-04 | 2.5 | | | | | | | 26.0 | | |
| B-04 | 5.0 | | | | | | | 21.0 | | |
| B-05 | 2.5 | | | | | | | 26.1 | | |
| B-06 | 2.5 | | | | | | | 13.1 | | |
| B-06 | 4.0 | | | | | | | 11.8 | | |
| B-07 | 2.5 | | | | | | | 11.0 | | |
| B-07 | 5.0 | | | | | | | 13.9 | | |
| B-08 | 2.5 | 59 | 28 | 30 | | | | 27.4 | | |
| B-08 | 4.5 | | | | | | | 9.7 | | |
| B-09 | 2.5 | | | | | | | 26.6 | | |
| B-09 | 5.0 | | | | | | | 10.9 | | |
| B-11 | 2.5 | 60 | 29 | 31 | | | | 27.0 | | |
| B-14 | 2.5 | 45 | 25 | 19 | | | | 23.6 | | |

LAB SUMMARY - F:\GINT\OREGON_LIBRARY.GLB - 9/16/15 14:32 - F:\NOTEBOOKS\1594907_MOLALLA URBAN RENEWAL ROAD IMPROVEMENTS\FIELD DATA\PERM_GINT\1594907-ALLEXPLORATIONS.GPJ

# ATTERBERG LIMITS RESULTS

HARTCROWSER

**CLIENT** HDJ Design Group/City of Molalla **PROJECT NAME** Molalla Urban Renewal Project

**PROJECT NUMBER** 15949-07 **PROJECT LOCATION** Shaver Avenue

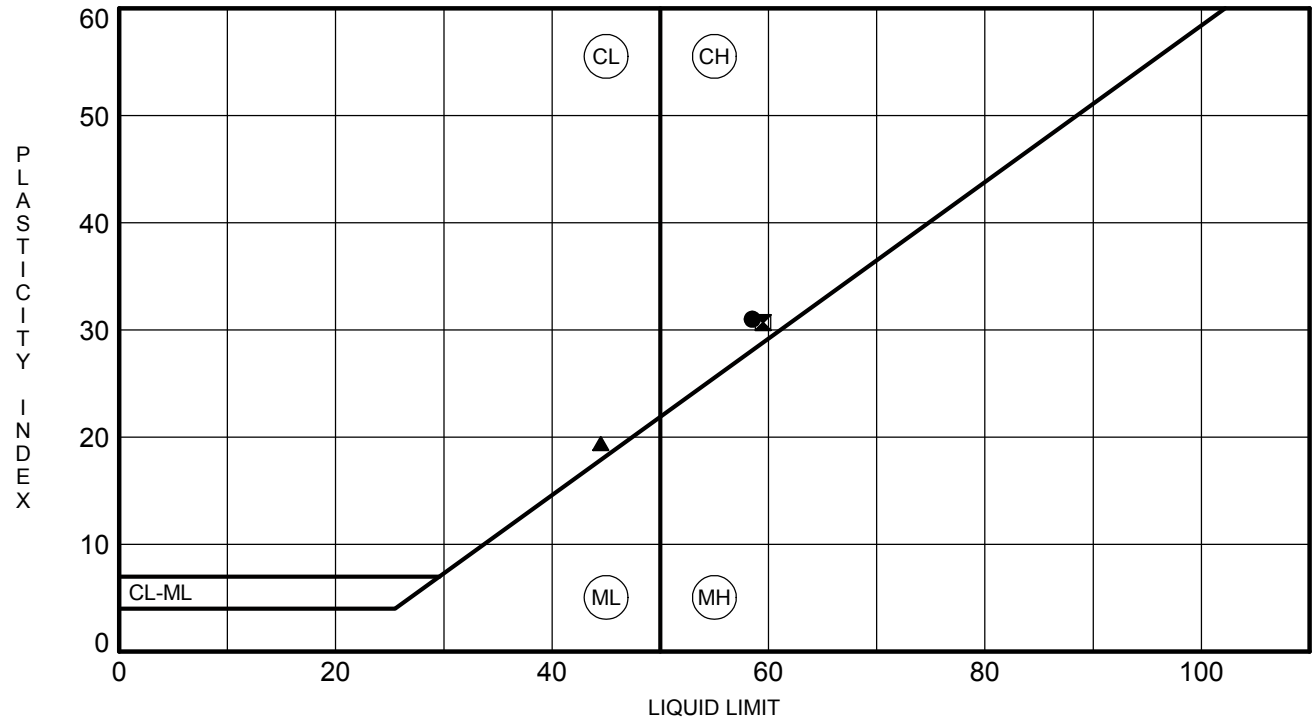


| | BOREHOLE | DEPTH | LL | PL | PI | Fines | Classification |
|---|---|---|---|---|---|---|---|
| ● | **B-08** | **2.5** | **59** | **28** | **30** | | **Brown CLAY** |
| ⧗ | **B-11** | **2.5** | **60** | **29** | **31** | | **Brown CLAY with occasional gravel** |
| ▲ | **B-14** | **2.5** | **45** | **25** | **19** | | **Brown silty CLAY** |

ATTERBERG LIMITS - F:\GINT\OREGON_LIBRARY.GLB - 9/16/15 14:56 - F:\NOTEBOOKS\1594907_MOLALLA URBAN RENEWAL ROAD IMPROVEMENTS\FIELD DATA\PERM_GINT\1594907-ALLEXPLORATIONS.GPJ

# APPENDIX C
# Pavement Core Photographs and DCP Data Correlations

# APPENDIX C

## Pavement Core Photographs and DCP Data Correlations

The appendix contains photographs of the pavement cores collected at the site. Additionally, plots showing the resilient modulus versus depth, as determined from our DCP data and correlations from ODOT (2011), are also contained in this appendix.

**Cores 1 through 4: Hart Avenue**

**Cores 5 through 7: Metzler Avenue**

**Cores 8 through 12: Molalla Avenue**

**Cores 13 through 17: Molalla Avenue**

**Cores 18 through 21: Molalla Avenue**

**Cores 22 through 25: Shaver Avenue**

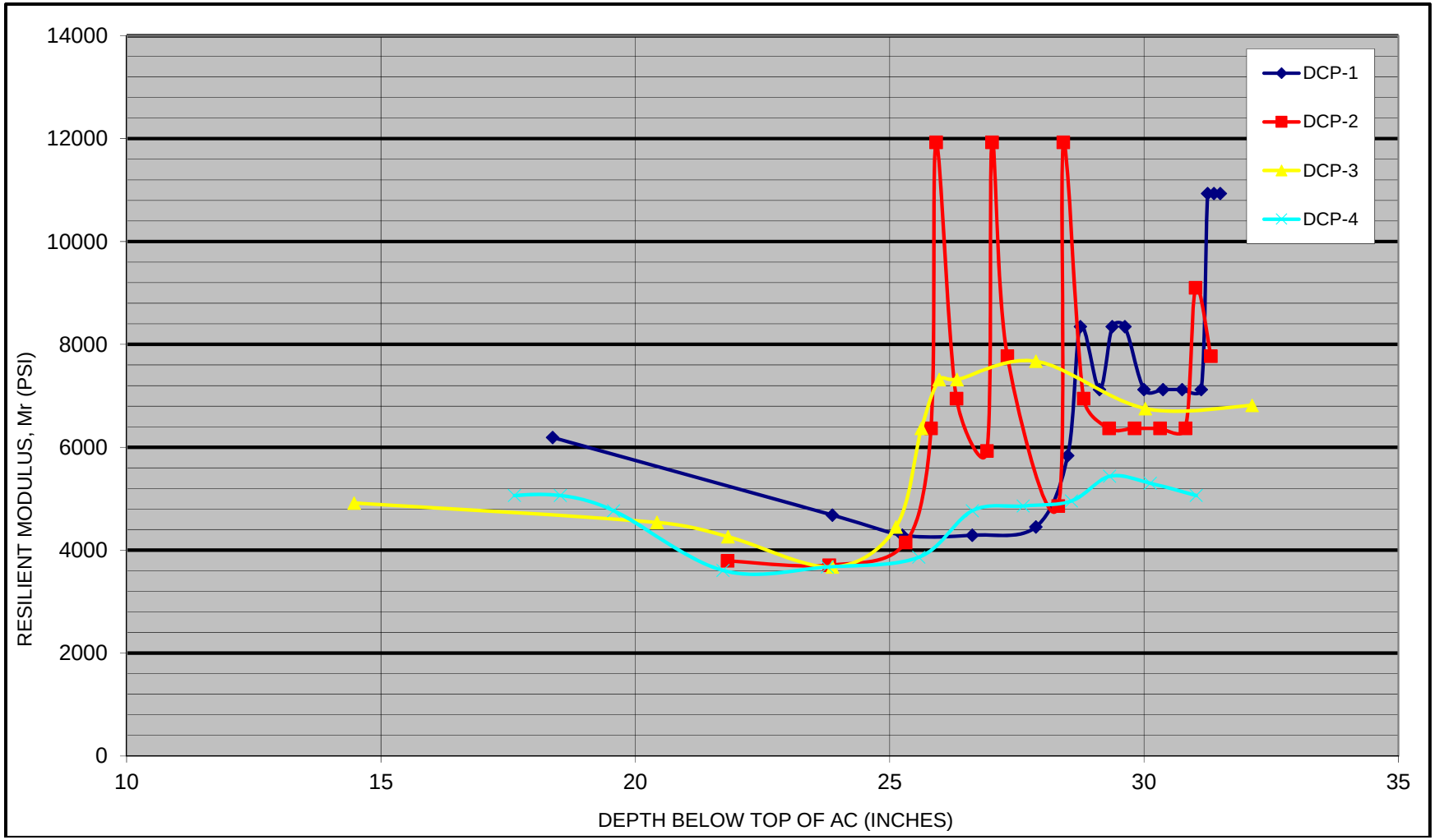


***Figure C-1 Hart Avenue DCP Correlations***

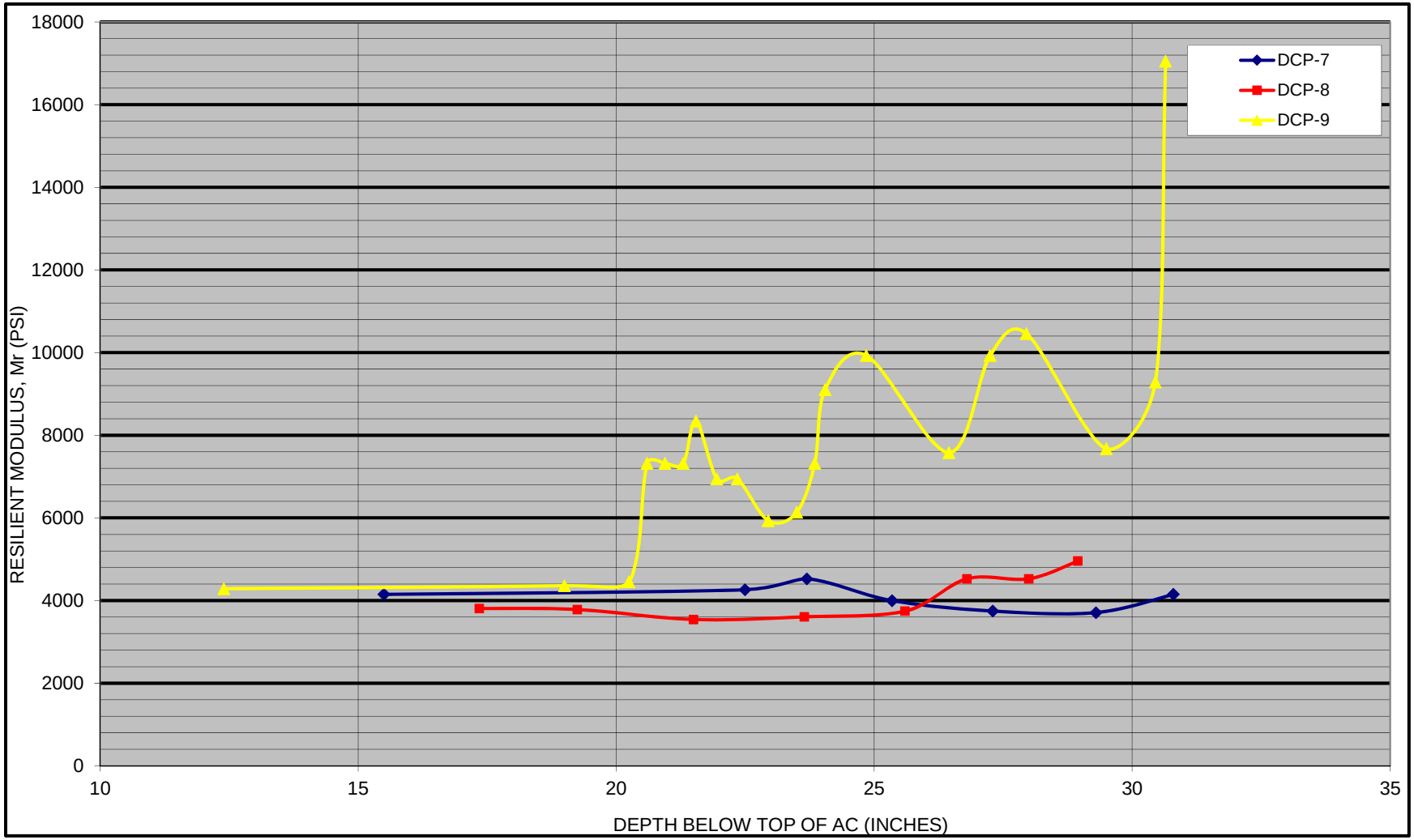


***Figure C-2 Metzler Avenue DCP Correlations***

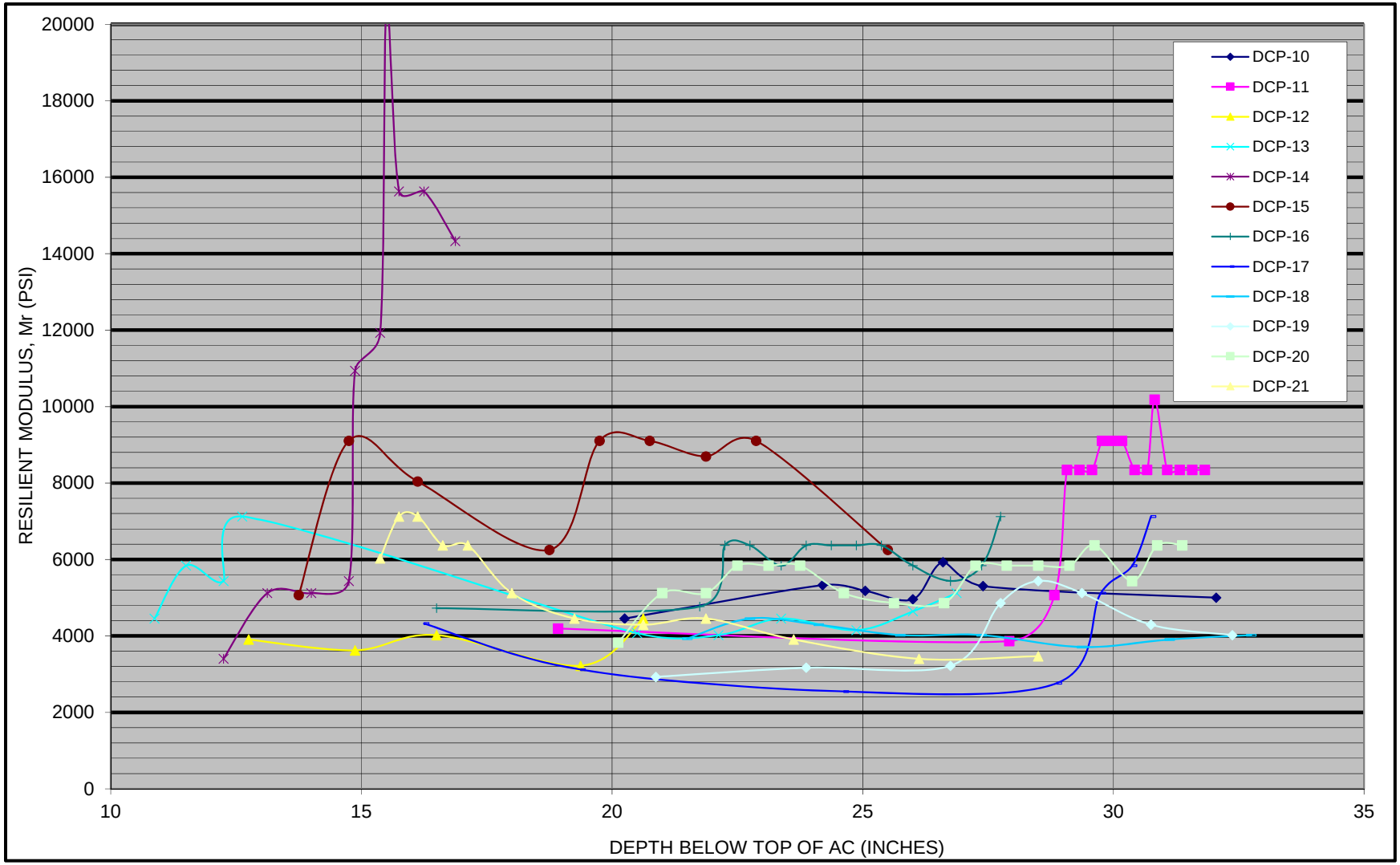


***Figure C-3 Molalla Avenue DCP Correlations***

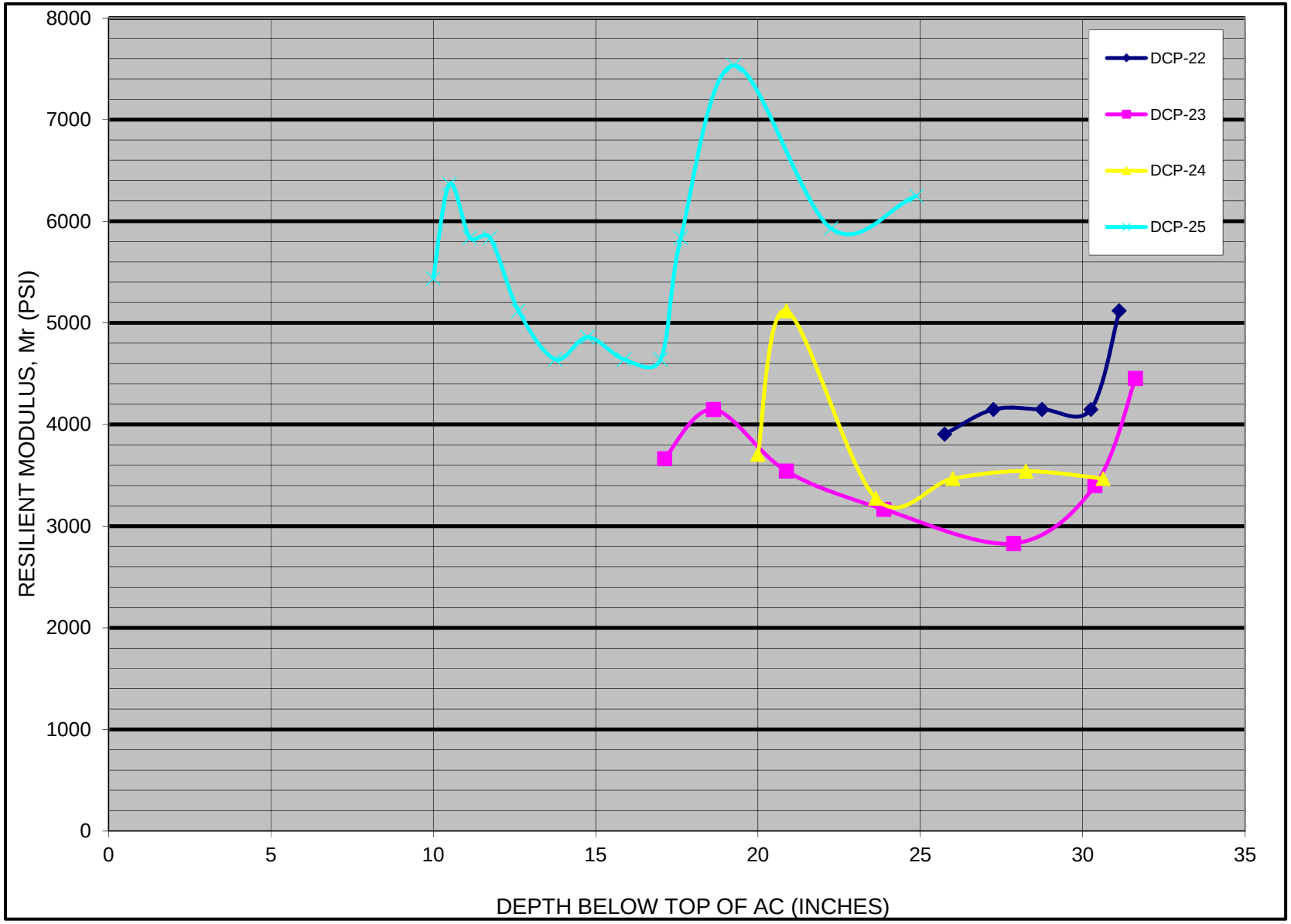


***Figure C-4 Shaver Avenue DCP Correlations***

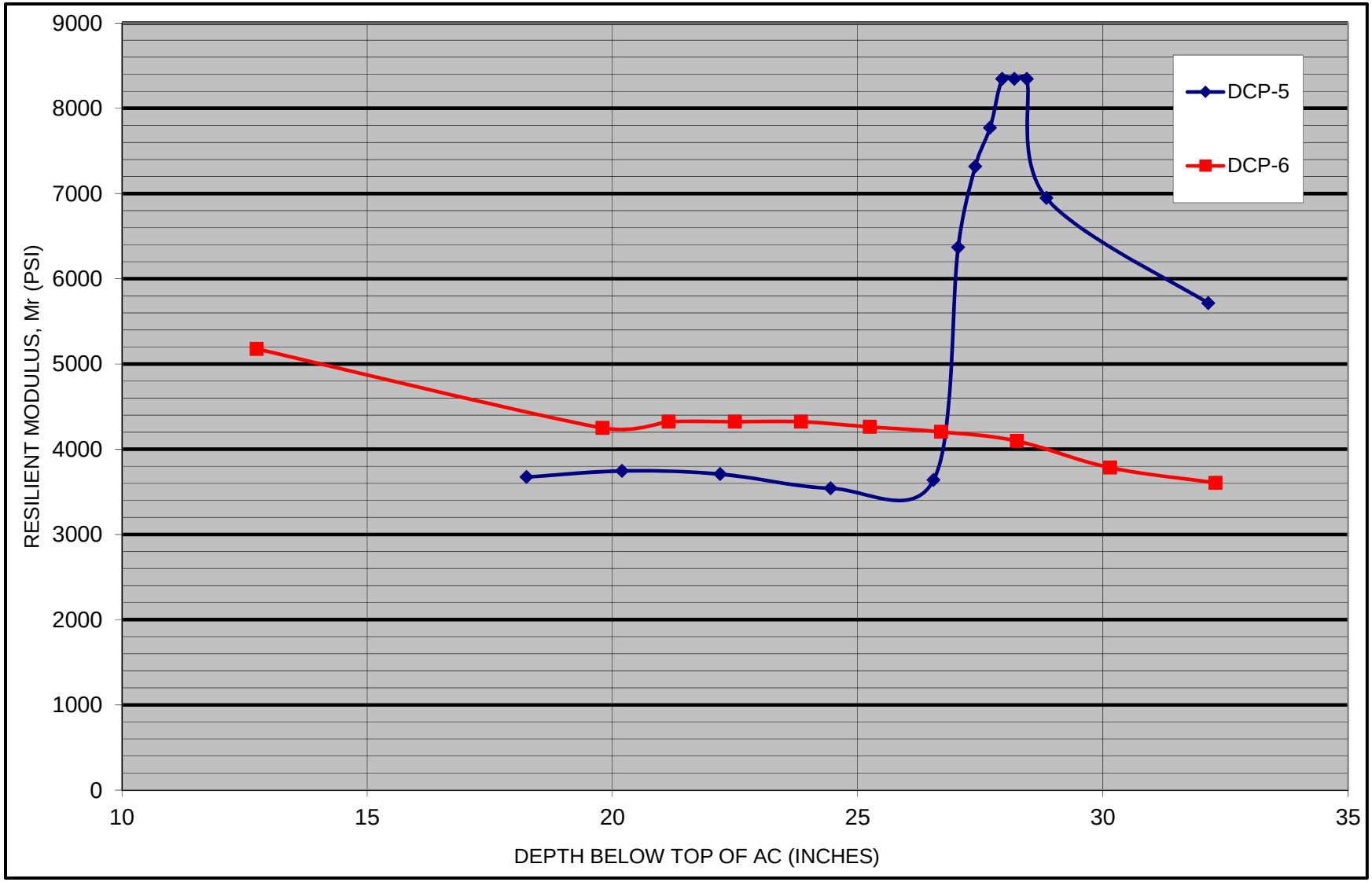


***Figure C-5 3rd Street DCP Correlations***